Robust Color Image Watermarking Technique based on DWT and ICA

P.Mangaiyarkarasi
Assistant Professor
Dept. of E&I Engg.
Annamalai University, India.

S.Arulselvi
Associate Professor
Dept. of E&I Engg.
Annamalai University, India.

ABSTRACT
In this paper, a robust, imperceptible and blind color image watermarking technique based on discrete wavelet transform (DWT) is proposed. The proposed embedding technique is based on computation of noise visibility function (NVF), where the strength of watermarking is controlled which results in watermarks at texture and edge areas are stronger than flat areas. For extraction, conventional techniques need embedding parameters such as strength, location and information about watermark or original image. In this work, an intelligent detection technique, namely, independent component analysis (ICA) is implemented for watermark extraction without the use of original image. The features of FastICA are quick convergence, easy to implement and suitable for watermark applications. The quality of watermarked image and extracted watermark are measured in terms of peak signal to noise ratio (PSNR) and similarity measure (SM) values respectively. Robustness of the proposed scheme is validated against various image processing attacks.

General Terms
Digital Color Image Processing, Network Security and Wavelet Applications in Digital Watermarking.

Keywords
Color Image Watermarking, Discrete Wavelet Transform, Noise Visibility Function and Independent Component Analysis.

1. INTRODUCTION
It has become a daily need to create copy, transmit and distribute digital data as a part of widespread multimedia technology in internet era. Hence copyright protection has become essential to avoid unauthorized replication problem. Digital image watermarking provides copyright protection to image by hiding appropriate information in an original image to declare rightful ownership [1]. Furthermore, it is an important issue to develop a robust watermarking scheme with a better trade-off between robustness and imperceptibility.

The world is colored in the human eyes and processing of color images is an essential criterion in this digital era. In human eye, cones are the sensors responsible for color vision. Experimental evidence has established that there are 6 to 7 million cones are in the human eye, and it can be divided into three principal sensing categories, corresponding to red, green and blue. Approximately, 65% of all cones are sensitive to red light, 33% are sensitive to green light, and only about 2% are sensitive to blue. Hence, in this work, blue component of a RGB image is chosen for embedding watermark [2].

Watermarking techniques can be divided into two main groups: i) embedding watermarks in the spatial domain and ii) frequency domain. Spatial domain watermarking directly embeds the watermark into the object while frequency domain embeds the watermark by changing frequency component values by an orthogonal transformation. In general, the frequency domain techniques can embed more bits of watermarks and resist more attacks than spatial domain techniques [3]. Several watermarking techniques based on the discrete cosine transform have been proposed [4 & 5]. DCT based methods are suitable to embed pseudo random numbers as watermarks; however, watermark embedded in DCT coefficients seems to be easily lost. Recently the discrete wavelet transform has been used to hide data in the frequency domain. Many literatures have reported the watermarking schemes based on DWT [6 & 7]. Wavelet transform has the excellent properties to minimize the data loss in the frequency transformation of images, to reduce noise and bias generation in images, and to provide extra robustness against irregular attacks.

In extraction, conventional watermark detection systems require previous knowledge of the watermark such as its location, the strength, the threshold or the original image. But the extraction based on ICA is a novel technique, which does not require the above mentioned embedding parameters. It requires watermarked coefficients and key as a mixture to extract the watermark.

A watermarking method based on DWT is applied in this paper for embedding the watermark in color images. For this, a perceptual model is applied with stochastic approach and it is based on computation of noise visibility function which has local image properties where the strength of watermarking is controlled. The result is that watermarks at texture and edge areas are stronger than flat areas. Besides, an intelligent detection algorithm namely ICA, which is based on blind source separation technique is implemented for extraction without the use of previous knowledge of the original image [8 & 9]. Multiple ICA algorithms are in existence and among them, FastICA is chosen in this work, since its convergence rate is high [10]. Robustness and transparencies of the above scheme is demonstrated with simulation results.

The paper is organized as follows: Section 2 reviews Discrete Wavelet Transform and section 3 discusses the proposed watermarking approach includes embedding and extraction procedures. In section 4, extraction technique based on ICA is explained in detail. Simulation results are presented in section 5 and conclusions are drawn in section 6.

2. DISCRETE WAVELET TRANSFORM
The proposed work depends on transforming the host image into discrete wavelet transform, and embedding the watermark within the coefficients resulted from the transform, then

taking inverse transform to get watermarked image. Many literatures have reported watermarking schemes based on DWT [7, 11 & 12]. The main advantage of wavelets is that they allow both spatial and frequency resolution and it is a part of upcoming compression standards. In addition to all, human perception research indicates that the retina of the eye splits an image into several components which circulate from the eye to the cortex in different channels or frequency bands. These channels can only be excited by the component of a signal with similar characteristics. In different channels, the processing of signals is independent [13]. The 2D-DWT divides the information contained in the image into an approximation sub image and three detail sub images, each with half the resolution of the original image in each direction. The transform can be iteratively performed by decomposing the approximation sub image.

Wavelet transform allows the decomposition of the signal in narrow frequency bands while keeping the basis signals space limited. Fig. 1 shows DWT decomposition using low pass and high pass analysis filters as h and g respectively. If the level of decomposition is increased, the approximate image will be more stable. But the complexity increases and the amount of information that can be embedded will be decreased. As a compromised way, the original image is decomposed into two levels. In wavelet analysis, an original image can be decomposed into an approximate image LL1 and three detail images LH1, HL1 and HH1 as shown in Fig. 1. Using wavelet analysis on the approximate image LL1 again, four lower-resolution sub-band images LL2 and three detail images LH2, HL2 and HH2 will be obtained and the approximate image holds the most information of the original image and others contain some high-frequency information such as the edge details.

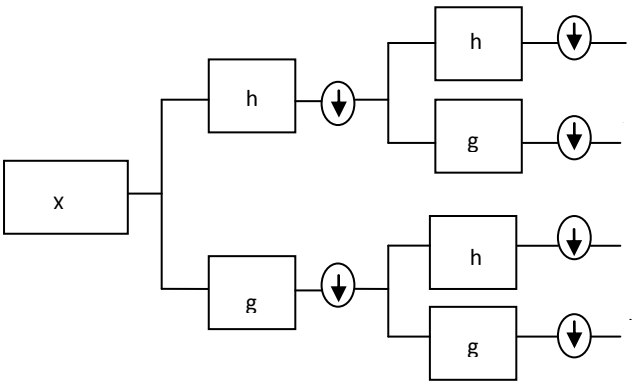

Fig 1: Decomposition of an image using DWT.

DWT analysis is given by

$$c_{j+1}[m,n] = \left(c_j(m,n) * h[-m]\right)\downarrow 2 \quad (1)$$

$$d_{j+1}[m,n] = \left(c_j(m,n) * g[-m]\right)\downarrow 2 \quad (2)$$

3. PROPOSED WATERMARKING APPROACH

3.1 Watermark Embedding

In color image, RGB value of each pixel is converted into RGB color spaces in which only R components constitute R color space, G components constitute G color space and B components constitute B color space. Watermark can be hidden in any one of the color channels. Here, the binary watermark is embedded in the blue channel as it is least perceptual to human eye. The blue component is decomposed to two level using discrete wavelet transform as shown in Fig. 2. The resultant subbands obtained from two level DWT are LL2, LH2, HL2 and HH2. The approximation i.e. low frequency components at LL2 sub-band are not chosen to embed watermark because they will seriously degrade the image quality. Similarly the diagonal detail i.e. high frequency coefficients HH2 are also not considered because security is poor when watermark is embedded in that subband. Hence, the watermark can be embedded in middle frequency subbands either HL2 or LH2 or both. The watermarked blue component is treated as B1.

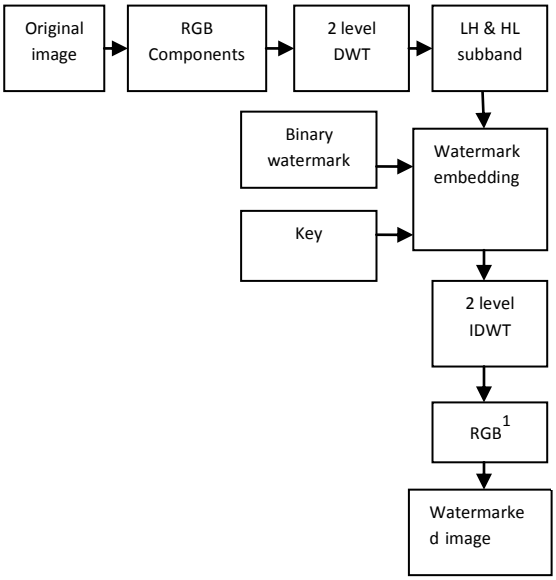

Fig 2: Proposed watermark embedding scheme.

A stochastic model of the cover image is applied to an adaptive watermark by computing NVF with non-stationary Gaussian model [14]. In this case, NVF can be expressed by

$$NVF(i,j) = \frac{1}{1+\sigma_x^2(i,j)} \quad (3)$$

where $\sigma_x^2(i,j)$ denotes variance of the cover image in a window centered on the pixel with coordinates (i,j). By applying NVF, the watermark in texture and edges becomes stronger than in flat areas. The watermark is embedded using the following equations:

$$I'LH_2(i,j) = LH_2(i,j) + E(LH_2)\alpha_1\left(1 - NVF(i,j)\right)W(i,j) + \frac{E(LH_2)}{10}.\alpha_2.NVF(i,j).W(i,j) \quad (4)$$

$$I'HL_2(i,j) = HL_2(i,j) + E(HL_2)\alpha_1\left(1 - NVF(i,j)\right)W(i,j) + \frac{E(HL_2)}{10}.\alpha_2.NVF(i,j).W(i,j) \quad (5)$$

where $I'LH_2(i,j)$ and $I'HL_2(i,j)$ are watermarked transform coefficients, $E(LH_2)\alpha_1$ and $E(HL_2)\alpha_1$ denote the watermark strengths of texture and $\frac{E(LH_2)}{10}.\alpha_2$ and $\frac{E(HL_2)}{10}.\alpha_2$ denote the watermark strengths of edge regions for LH and HL subbands, respectively. α1 and α2 are smoothing factors at the texture regions and flat regions, E denotes the mean and $W(i,j)$ is the watermark. To obtain the watermarked blue component, inverse DWT is performed including the watermarked subbands. Finally R, G, B1 are combined together to obtain the watermarked color image.

3.2 Watermark Extraction

During extraction, the watermarked image is again separated into R, G, B1 components and B1 component is decomposed two levels using DWT [15]. From the resultant subbands, LH21 and HL21 along with key are used to generate input mixture for ICA detector. From the mixtures, ICA extracts the watermark from the watermarked image as shown in Fig. 3. Since ICA doesn't require original image for extraction, the proposed extraction is said to be blind.

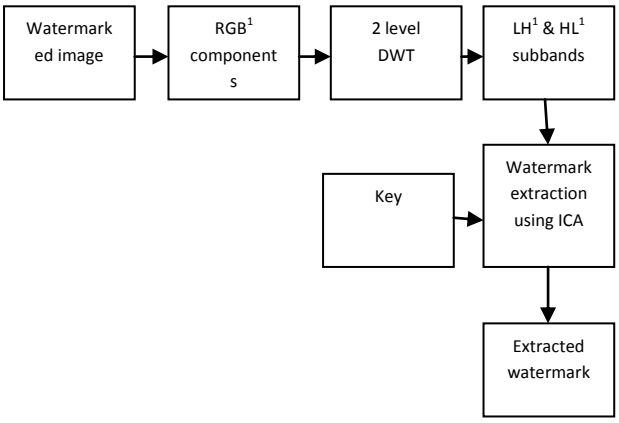

Fig 3: Proposed watermark extraction scheme.

4. INDEPENDENT COMPONENT ANALYSIS

This section briefly reviews ICA algorithm and how ICA is applied to watermark extraction [16]. Independent component analysis is a novel statistical technique that aims at finding linear projections of the data that maximize their mutual independence. ICA has received attention because of its potential applications in signal processing such as in feature extraction, and blind source separation with special emphasis to physiological data analysis and audio signal processing. The goal of ICA is to recover the source signals from the sensor observations that are linear mixtures of independent source signals. It aims at extracting unknown hidden components from multivariate data using only the assumption that the unknown factors are mutually independent [8].

Fast ICA algorithm is outlined as follows:

i) The mean of the mixed signal X is subtracted so as to make X as a zero mean signal as $X = X - E[X]$, where $E[X]$ is the mean of the signal.

ii) Then covariance matrix $R = E[XX^T]$ is obtained and eigenvalue decomposition is performed on it is given by, $R = EDE^T$, where E is the orthonormal matrix of eigenvalues of R and D is the diagonal matrix of eigenvalues.

iii) Find the whitening matrix, P which transforms the covariance matrix into an identity matrix and it is given by $P = Inv\left(sqrt(D) \times E^T\right)$.

iv) Choose an initial weight vector W, such that the projection $W^T X$ maximizes non gaussianity as

$$W^+ = E\{X * g(W^T X)\} - E\{g'(W^T)\}W \tag{6}$$

where 'g' is the derivative of the nonquadratric function.

v) The variance of $W^{+T} X$ must be made unity. Since X is already whitened it is sufficient to constrain the norm of W^+ to be unity.

$$W = W^+ / \|W^+\| \tag{7}$$

If W not converges means go back to step (iv).

vi) The demixing matrix is given by

$$W = W^T \times P \tag{8}$$

and independent components are obtained by

$$\bar{S} = W \times X \tag{9}$$

In this work, a linear mixture of watermarked image with key is generated as input signal to the ICA and the ICA separates the watermark as the output from the mixtures. The novelty of this detector is, that it does not require original image and embedding parameters such as watermark location and strength. Moreover, it is fast in convergence, easy to implement and suitable for watermarking applications. With the help of a private key K to create different mixtures, one can extract successfully the watermark to claim the ownership.

Mixtures are created by the following equations:

$$X_1 = a_{11}I' + a_{12}W + a_{13}K \tag{10}$$

$$X_2 = a_{21}I' + a_{22}W + a_{23}K \tag{11}$$

$$X_3 = a_{31}I' + a_{32}W + a_{33}K \tag{12}$$

where X_1, X_2, X_3 are mixtures, I' is the watermarked image, a is a mixing matrix, W is the encrypted watermark matrix and K is a random key in the embedding process.

5. SIMULATION RESULTS

The proposed color image watermarking is tested on some test images (Peppers, Greens, AU logo, Admini , Home) of size 256 x 256. Initially the host images are separated into red, green, blue components and the blue component (B) is decomposed up to two levels by discrete wavelet transform since it is less perception to human vision. A binary watermark (IEEE logo) of size 64 x 64 is embedded in the middle frequency sub-bands LH_2 and HL_2 using equations (4) and (5). Fig 4(a) shows the original image (Peppers) and Fig. 4(b) shows the binary watermark. To obtain the watermarked image, inverse DWT is performed on the watermarked coefficients of blue component (B1) and combining with red and green components.

Fig. 5 shows the R, G, B component of the original image (Peppers) and the corresponding watermarked image obtained by the proposed (DWT with FastICA) scheme. The PSNR value calculated for the three color channels R, G, B are 41.0388 dB, 38.9989 dB and 43.4084 dB respectively. From the results, it is inferred that blue component retain the energy of the signal by producing high PSNR value when compared to other channels. The watermark detection using ICA extracts the watermark perfectly from the watermarked image. To justify the extraction, performance measure namely similarity measure (SM) is calculated between original and extracted watermark. SM value indicates the degree of similarity between two images and it should vary from 0 to 1. The extracted watermarks using FastICA from the three color channels are shown in Fig. 6, and their similarity measure values indicate watermark can be extracted better from blue component.

Fig 4: (a) Original image (Peppers) & (b) Watermark.

(a) Red component (41.0388 dB)

(b) Green component (38.9989 dB)

(c) Blue component (43.4084 dB)

Fig 5: R, G, B components and their corresponding watermarked images.

R (0.9700) G (0.9682) B (0.9773)

Fig 6: Extracted watermarks from R, G, B components.

Same set of experimentation is performed on other test images to strengthen the results. Fig. 7. shows the original images, their watermarked images and corresponding extracted watermarks obtained by the proposed scheme. The visual quality of watermarked images shows high degree of imperceptibility. This can be statistically proved by the PSNR (dB) values tabulated in Table 1, where all the watermarked images have values greater than 30dB. This value should vary from image to image because of the effectiveness of NVF.

(a) Greens

(b) AU logo

(c) Admini

(d) Home

Fig 7: Different input images, corresponding watermarked images (blue channel) and extracted watermarks.

Table 1. PSNR values (dB) of various images for R, G, B Channels

Images	Red	Green	Blue
Peppers	41.0388	38.9989	43.4084
Greens	37.5743	36.5830	38.6680
AU logo	33.4522	32.2964	33.7933
Admini	36.9991	35.6893	37.8434
Home	35.8237	35.3764	35.8578

Table 2. Similarity Measure values of extracted watermarks from watermarked images for R, G and B components

Images	Red	Green	Blue
Peppers	0.9700	0.9682	0.9773
Greens	0.9612	0.9574	0.9632
AU logo	0.9402	0.9376	0.9461
Admini	0.9489	0.9401	0.9522
Home	0.9473	0.9388	0.9502

From the results, it is also noted that all the extracted watermarks possess more than 90% of similarity with the original watermark. Among them, the watermark extracted from the blue channel produce high similarity measure than the other two channels. Hence, in this work, it is recommended that watermark can be embedded in blue component to obtain better performance.

The robustness of the proposed watermarking scheme is validated against attacks like, JPEG Compression , Gaussian noise addition, Salt & Pepper noise addition, Median filtering, Rotation, Blurring and Cropping. Fig. 8(a) shows the JPEG compressed image with compression ratio 20. Fig. 8(b) shows the watermarked image added with Gaussian noise of zero mean and variance 0.1. Fig. 8(c) shows the watermarked image added with Salt & Pepper noise with noise density 0.1 with the extracted watermark. Fig.8 (d) and 8(e) show the median filtered image of window size 5x5 and rotated by 30 deg. Fig. 8(f) shows the watermarked image blurred by a factor 0.1 and Fig 8(g) shows the watermarked with 20% cropping, where the pixels of the watermarked image are replaced by pixels of another image. The extracted watermarks from the respective attacks are also given in Fig. 8(a)-(g). The PSNR and SM values calculated after the above mentioned attacks are tabulated in Table 3.

(a) JPEG compressed (CR=20)

(b) Gaussian noise added (0.1)

(c) Salt & Pepper noise added (0.1)

(d) Median filtered (5x5)

(e) Rotated (30 deg.)

(g) Cropped (20%)

(f) Blurred (0.1)

Fig .8. Different types of attacks on watermarked image.

Table 3. PSNR and SM values of watermarked image after implementing various attacks

Attacks	PSNR (dB)	SM
JPEG compression	26.4532	0.95342
Gaussian noise	29.3112	0.9582
Salt & Pepper noise	27.6069	0.9534
Median filtered	26.1139	0.9564
Rotation	26.3261	0.9521
Blurring	31.8533	0.9600
Cropping	35.0794	0.9628

From Table 3, it is inferred that the proposed scheme, DWT with FastICA for color images performs better in watermark embedding as well as in extraction, by producing PSNR values more than 25dB for the above mentioned attacks and SM value higher than 95%. Also it is noted, that the quality of watermarked image is not very much affected by the attacks. The proposed extraction technique extracts the watermark by producing high SM value.

6. CONCLUSION

A robust and blind watermarking algorithm for color images using DWT and extraction by FastICA is presented in this paper. The proposed algorithm is adaptive by implementing NVF, in which the watermark in texture and edges are stronger in flat areas. The results obtained from simulation using MATLAB.7 are presented. The performance of the proposed scheme is evaluated in terms PSNR and Similarity Measure values. Initially, the host image is separated into red, green and blue component, watermark is embedded in these components individually and inverse wavelet transformed to obtain the watermarked image. Among them, blue component produces a high PSNR value (43.4084 dB) when compared to the other two components. During extraction, the extracted watermark from the blue component posses high degree of similarity (97%) when compared to the other two components. From the results, it is inferred that imperceptibility and robustness of the proposed scheme is considerably good for blue component. The advantage of using FastICA algorithm for watermark detection is that it does not need information about embedding location, original image and it converges fast. Robustness is validated by implementing common transformations and image processing attacks. The proposed scheme generates PSNR values greater than 25 dB in the presence of image processing attacks and it is also possible to extract the watermark with 95% degree of similarity from the attacked images. Hence the proposed watermarking algorithm can be better suitable for copyright protection and data authentication of color images. The performance of the scheme can be improved by tuning the embedding parameters as well as the mixing matrix of ICA during extraction.

7. REFERENCES

[1] Xia X., Boncelet C.G., and Arce G. R. 1997. A multiresolution watermark for digital images. In Proceedings of the 4th IEEE International Conference on Image Processing.

[2] Rafael C. G., and Richard E.W. Digital Image Processing. Second Edition. Pearson Education.

[3] Mangaiyarkarasi P., and Arulselvi S. 2012. Improved performance by parametrizing wavelet filters for digital image watermarking. Signal & Image Processing: An International Journal, vol. 3, no. 1, pp. 29-38.

[4] Hsu C. T., and Wu J. L. 1998. DCT based watermarking for video. IEEE Transactions on Consumer Electronics, vol. 44, no. 1, pp. 206-216.

[5] Wu C. F., and Hsieh W.S. 2000. Digital watermarks using zerotree of DCT. IEEE Transactions on Consumer Electronics, vol. 46, no. 1, pp. 87-94.

[6] Kundur D., and Hatzinakos D. 1998. Digital watermarking using multiresolution wavelet decomposition. In Proceedings of the IEEE Int. Conf. on Acoustics, Speech and Signal Processing .

[7] Wang H. J. M., Su P. C., and Kuo C. C. J. 1998. Wavelet-based digital image watermarking. J. Opt. Express, vol.4, pp. 491-496.

[8] Hien T. D., Nakao Z., and Chen Y. M. 2004. ICA-based robust logo image watermarking. In Proceedings of SPIE, Security, Steganography and Watermarking of Multimedia Contents.

[9] Bounkong S., Toch B., Saad D., and Lowe D. 2003. ICA for watermarking digital images. J. Mach. Learn. Res. Special issue on ICA, 1471-1498.

[10] Thirugnanam G., Natarajan M., Mangaiyarkarasi P., and Malmurugan N. 2009. Comparison of independent

component analysis for DWT based digital image watermarking. International Journal of Advance Research in Computer Engineering, vol. 3, no. 1, pp.165-169.

[11] Cox I .J, Miller M. L., Bloom J.A., Fridrich J., and Kalkar T. Digital watermarking and steganography Second Edition, Morgan Kaufmann Publishers.

[12] Joo S., Suh Y., Shin JKikuch H., and Cho S. J. 2002. A new robust watermark embedding into wavelet DC components. J. ETRI. 401-404.

[13] Baisa L. G., and Suresh N. M. 2011. Secured color image watermarking technique in DWT-DCT domain. Interrnational Journal of Computer Science and Information Technology, vol.1, no. 3, pp. 36-44.

[14] Voloshynovskiy S., Herrigel A., Baumgaertner N., and Pun T. 2000. A stochastic approach to content adaptive digital image watermarking. Lecture notes in Computer Science, pp. 212-236.

[15] Ramana Reddy P., Prasad V.N.K., and Sreenivasa Rao D. 2009. Robust digital watermarking of color images under noise attacks. International Journal of Recent Trends in Engineering, vol. 1, no. 1, pp. 364-338.

[16] Hyvarinen A., Karhunen J., and Oja E. Independent Component Analysis. First Edition, John Wiley & Sons. Inc.

8. AUTHORS PROFILE

P.**MANGAIYARKARASI** received her B.E., Electronics & Instrumentation, from Annamalai University in 1999 and M.E., Process control and Instrumentation from Annamalai University in 2001. Currently she is doing Ph.D. in the area of Digital Image Watermarking. At present she is working as Assistant Professor in the Dept. of E&I Engg., Annamalai University. Her research interests include Digital Signal Processing, Digital Image Processing and Digital Watermarking.

S.**ARULSELVI** received her B.E., Instrumentation & Control from GCT, Coimbatore in 1988, M.E., Control and Instrumentation from Anna University in 1998 and Ph.D. in Power Electronics from Anna University in 2007. Currently she is working as Associate Professor in the Dept. of E&I Engg., Annamalai University. Her area of interests include Digital Watermarking, Image Processing, Power Electronics and Control etc.