Design and Implementation of Smart Relay based Remote Monitoring and Controlling of Ammonia in Poultry Houses

Jawad K. Othman
Electrical Engineering Dep.
College of Engineering
University of Basrah
Basrah, Iraq

Jawad R. Mahmood, PhD
Electrical Engineering Dep.
College of Engineering
University of Basrah
Basrah, Iraq

Ghazi Y. A. Al- Emarah, PhD
College of Veterinary Medical
University of Basrah
Basrah, Iraq

ABSTRACT
The aim of this study is the automation of the monitoring and controlling of ammonia concentration in the air of poultry houses by using Smart Relay (SR). Ammonia (NH3) concentration in poultry houses is a production issue of concern, where it is one of the harmful gases that significantly affect the health of birds and growers (through exposing to the high concentration levels of ammonia). The system achieve 24 hours remote monitoring without human intervention through using the communication connection feature of smart relay with the local operator communication networks via its communication interfaces that used along with it in this system. This remote monitoring is achieved through sending and receiving SMS messages from this system to the mobile phone of person in charge of poultry farms and vice versa.

General Terms
Remote, Monitoring, Controlling, Communication, Message, Flowchart, Program, Software, Hardware, Logical, Threshold value, Exceeding, Critical, Normal, Didactic, proposed system, and Automatic.

Keywords
Smart Relay (SR), GSM, SMS, Report, Poultry houses, Litter, Ammonia (NH3), Relative Humidity(RH), Temperature(T), AC Drive, Exhaust fan, Threshold Limit Value (TLV), Automation, Remote Monitoring System (RMS), Mobile phone, and Timer

1. INTRODUCTION
Noxious gases in poultry houses are generated as a product of animal metabolism and as animal wastes break down. These gases can produce oxygen-deficient, toxic or dangerous atmospheres. The most common noxious gas, which is produced in poultry houses, is ammonia (NH3) [1]. Ammonia is a colorless, alkaline, water-soluble gas that is produced by microbiological deamination or reduction of nitrogenous substances. Microbial decomposition of uric acid in the litter is the primary source of NH3 generation [2]. Litter type, litter management, humidity, pH, and temperature all affect NH3 generation and concentration level [3].

Humidity, in conjunction with high temperature, promotes bacterial growth, which decompose organic material producing ammonia in the process [4]. These parameters should be kept in a controllable range (26 to 34 °C for temperature and 50 to 70% for humidity) [5]. For relative humidity the lower relative humidity levels will tend to result in a dusty house and high heating costs while higher relative humidity levels can lead to wet litter and high ammonia concentrations [6].

Ammonia gas is one of the natural components of outdoor air, where the normal concentration of this gas in the outdoor air is 5ppm. While the 10 ppm can be considered as a normal concentration level of ammonia gas in the indoor air of the poultry houses [7].

The health and safety executive give a Threshold Limit Value (TLV) of 25 ppm ammonia for eight hour exposure or 35 ppm for exposure up to fifteen minutes. However, poultry can develop a variety of disorders when exposed for long periods to levels as low as 20 ppm [8].

Aerial ammonia in poultry housing adversely affects bird performance, such as growth rate, feed efficiency, carcass quality and susceptibility to disease challenge [9]. To minimize these adverse effects on bird performance and workers' health, poultry producers have been advised to keep their house ammonia levels less than 25 ppm [10]. The effects of ammonia are highly dependent on the exposure time. It should therefore be noted that any effect demonstrated at rather high concentrations is likely to be present at much lower concentrations with longer exposure times [11].

Ammonia is detectable by human being at a concentration of 25 ppm or more, while the maximum concentration that human being can withstand is 100 ppm for eight hours [12]. It is common during winter months for ammonia levels to exceed 25 ppm even under normal winter ventilation rates. Although safety experts debate it, 25 ppm is frequently recommended as a maximum acceptable level for ammonia. If your eyes burn when you enter an enclosed poultry house, you should expect that ammonia levels are at least 20 ppm.

Ammonia concentrations in poultry houses must not exceeds 25 ppm; generally a limit value of 15 ppm is adopted for poultry [13]. This can be achieved by careful litter management [14], and ensuring adequate ventilation [15].

In order to automate the poultry farms and minimize human intervention in the monitoring and control ammonia subject in poultry houses, there is a need to upgrade the conventional supervisory monitor system of ammonia in poultry houses in order to reduce the errors caused by humans being. This study proposes a remote monitoring and controlling system that automatically and continuously tests the status of ammonia level, relative humidity and temperature by using remote smart relay system. The system monitors, analysis and sends report

to the person in charge if these three components exceed their TLV's.

Using smart relays in automation processes provides a lot of flexibility and reduction cost for the design and implementation of monitoring and control systems through the functions they have compared with the classic equipment [16].

The smart relay with communication interface have been used in this work in order to remotely monitor and control NH3 concentration, RH, and temperature in the poultry houses by sending alert messages or receive instruction messages via SMS to or from the mobile phone of the supervisor.

2. HARDWARE AND SOFTWARE

The proposed system based on Smart relay (RMSRS) is a small automated system remotely monitors Ammonia (NH3) along with Relative Humidity (RH), and Temperature in the poultry houses without human intervention and at the same time send alert reports and receive instructions via SMS messages to and from the mobile phone of the person in charge. To achieve that, the proposed system should consists of two parts. These parts are the hardware part and the software supporting part.

2.1 Hardware Part

The block diagram of the pictured proposed system in Fig.1 is shown in Fig.2, as it is clear from the block diagram, the system consists of the following equipment:

Fig. (1): A photographic view of the Smart Relay Remote monitoring system for NH3, RH and Temperature.

1- RH Sensor: HX71-V1 model, 8–24VDC power supply, (0 to 5VDC) output, measuring range (0 to 100%) RH.

2- NH3 Sensor: KB-501 model, 24VDC power supply, (4 to 20mA) output, measuring range (0 to 100ppm).

3- Temperature Sensor: Pt100-6S-SLK model, (0 to 10VDC) output, measuring range (-50 to 200°C).

4- Smart Relay: (Zelio logic SR3B101BD model, 24VDC Power supply, 6 inputs (2 discrete type (24VDC) & 4 analog type (0-10V), 4 outputs switch relay type).

5- A/D Extension module: (Zelio logic SR3XT43BD model, compatible with the used smart relay, powered by the smart relay, having 2 analog optional inputs (0-10VDC or 4-20mmA) & 2 analog outputs (0-10VDC).

6- Communication interface: (Zelio logic SR2COM01 model, to interface the smart relay to the GSM modem.

7- GSM Modem: (Zelio logic SR2MOD02 model, Sending alert messages or receive instruction messages via SMS to or from the mobile phone of the supervisor.

2.2 Software Part

The flowchart shown in Fig. 3 details the steps the system should follow in order to achieve the remote monitoring for ammonia along with the temperature and humidity. These steps or functions are implemented through appropriate software design for this purpose by using FBD language in Zelio soft program of the smart relay. The logical equivalent of the driving software is shown in Fig.4. From this Figure one can see there are three monitoring blocks (B01, B02, and B03) to remotely monitor NH3, RH, and Temperature, respectively. Fig.5 shows the internal construction of these monitoring blocks.

The hardware and software parts of the proposed system achieve remote monitoring for ammonia along with humidity, and temperature via send and receive SMS messages to or from the mobile phone of the person in charge based on the two monitoring situations for the system:

- Monitoring during the normal situation: according to a request SMS message received from mobile phone of the person in charge as an instruction message, the system receives this message via **Message COM Receiver #1** block as a code message to activate the three monitoring blocks (**B01**, **B02**, and **B03**) to replay send the instantaneous values of NH3, RH, and temperature via three separating SMS messages. The ON delay timers block (T1, T2, and T3) create time separations around 2 seconds for each, to create sequent activation for the three monitoring blocks (**B01**, **B02**, and **B03**) to avoid the confusion case at sending via communication block.

- Monitoring during the critical situation: The monitoring blocks of NH3, RH, and Temperature continuously compare the instantaneous values of these parameters with their threshold values. Therefore, any one of the three parameters exceeds its threshold value at any time; the system automatically will send one SMS message as an alert message to the mobile phone of the person in charge. This SMS message includes alarm text in addition to the instantaneous value of this parameter.

In addition to the remote monitoring feature, this proposed system provides other feature to the person in charge of the poultry farms through providing remotely control feature on the electrical ventilation fan of the poultry house.

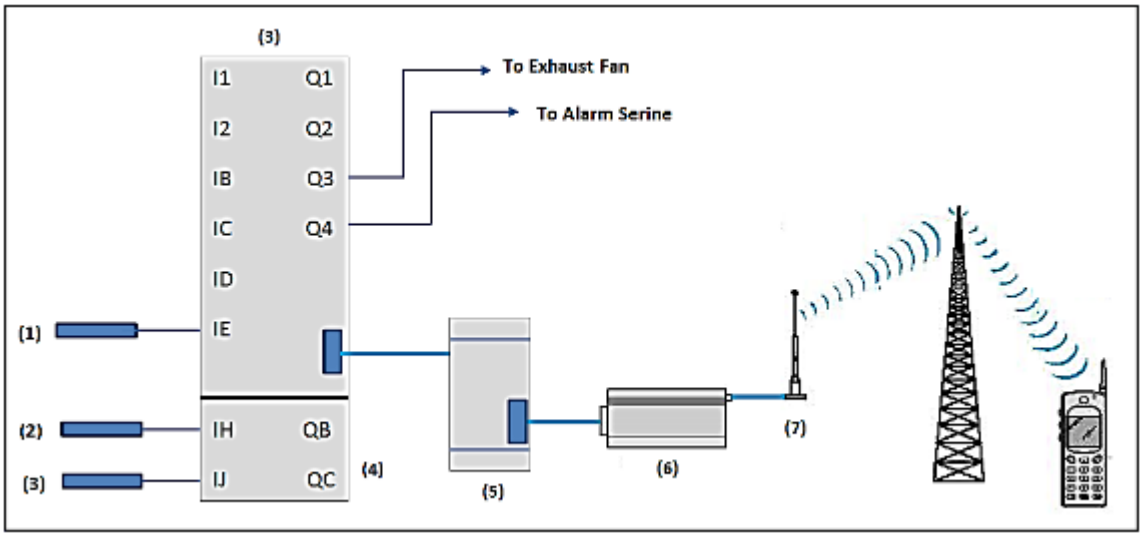

Fig. (2): The General Layout of the Smart Relay Remote monitoring system.

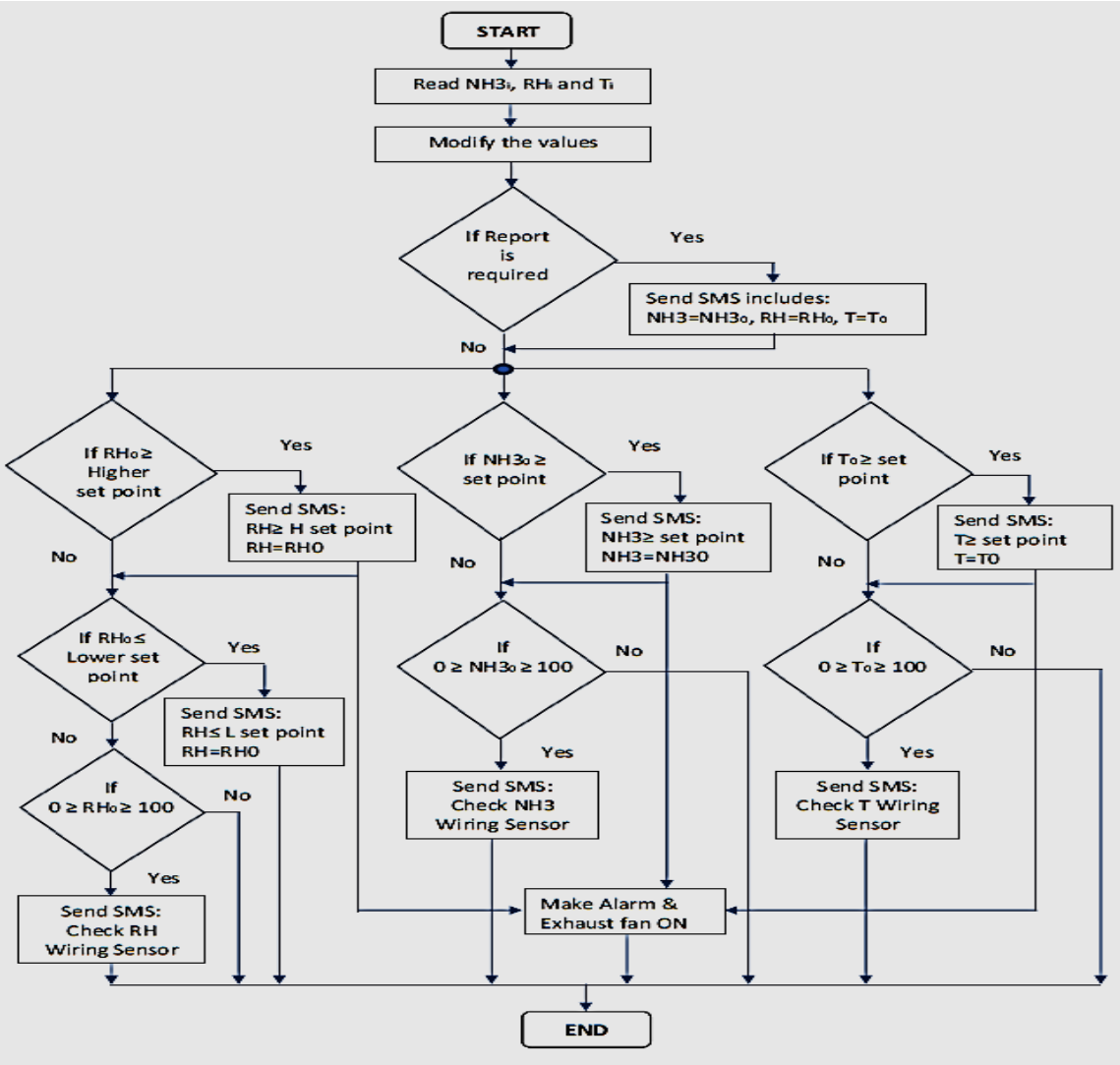

Fig. (3): Flowchart of Ammonia, RH and Temperature Remote Monitoring System Based on Smart Relay

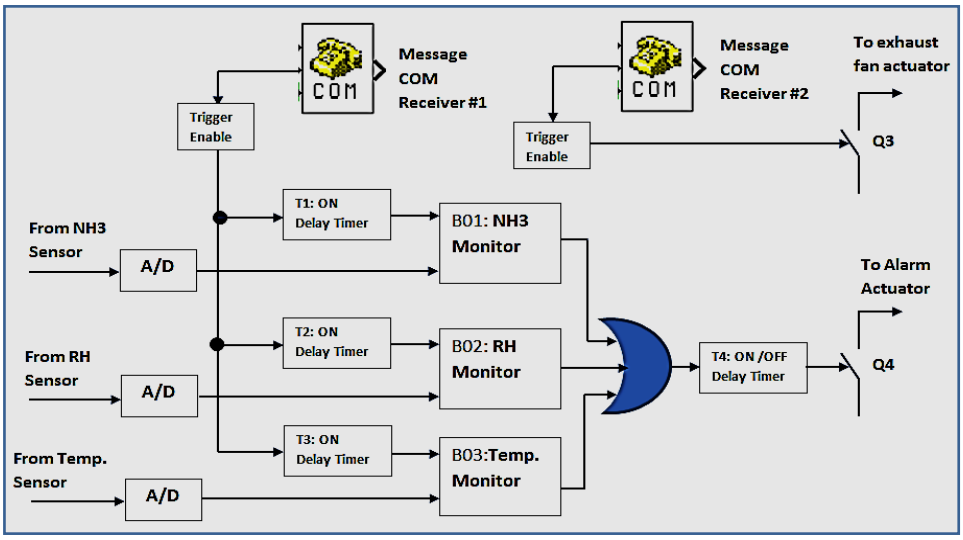

Fig. (4): The logical equivalent of the required software program of the monitoring for NH3, RH, and Temperature

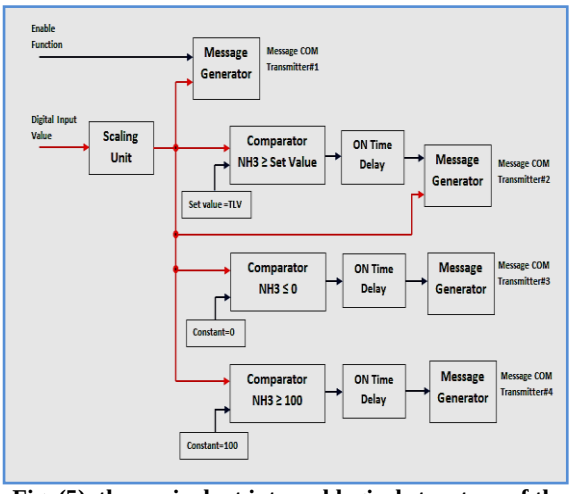

Fig. (5), the equivalent internal logical structure of the software design of the monitoring application block.

The person in charge can switching On/Off the ventilation fan by using his mobile phone through sending instruction cod in form of SMS message to the system, which in turn receives these messages through **Message COM Receiver#2** and activate the smart relay output contact marked Q3 responsible for powering the exhaust fan.

3. RESULTS AND DISCUSSION

The didactic poultry field of the veterinary medical college of Basrah University has been used to conduct the test experiment on (16-17, April, 2013). This poultry field consists of one hall. This hall is divided into 5 sectors by plastic sheets with (4m length x 3m width x 4m height) dimensions for each. Each sector includes 5 cages, each one contains 15 hens. Each sector involves one intake water and one intake feeding for each cage. Litter of the hall consists of wooden excelsior. The experiments have been done on the 7th and 8th days of the chicken available in this field.

This didactic poultry field is ventilated by using one wall exhaust fan for each sector, installed on 3m height with 20" size.

Fig. (6): Sampling location of the didactical poultry field

After completing the installation of the system inside the didactical poultry field, as shown in Fig.6, the NH3 and the other environmental parameters (RH and Temperature) had been read for 24 hours period from 10:00AM of the 16-April-2013 to 10:00AM 0f the 17-April-2013 through sending SMS messages from RMSRS to searcher mobile phone. Table 1 list down the 24 hours collected data for the NH3, RH, and Temperature inside the poultry field.

Each row of the Table no.1 represents the contained data in the SMS messages report, which had been sent from the proposed system to the mobile phone, either by mobile request mode or as a result of the set point value exceeding of the parameters (auto sending mode). Rows B and E, belong to auto sending mode here, the system detects a set point exceeding of the NH3

concentration level and the Temperature value (NH3 set point =10 ppm & T set point = 30). Therefore, the system sent two separately SMS messages to the mobile phone include warning along with the instantaneous value of the parameter for both NH3 and T, respectively. These two messages have been pictured at the moment of phone receiving them, as shown in figures (7 and 8). The format of these SMS messages is clear from these pictures.

Because the auto sending mode through the proposed system had been configured to activate for one of two cases occur or for both: (set point exceeding or wiring problems). Therefore, this is the reason why the data rows B and E did not involve RH data, where RH quantity didn't overtake its set point at these times (RH upper set point = 70% as designed in the program).

Table 1. Acquired data via the SMS messages reports.

Row No.	Time	NH3 (ppm)	RH (%)	T (°C)	Type of sending
A	10:00AM	5.0	48.0	29.0	By mobile request
B	03:00PM	12.0	-	31.0	Auto sending
C	06:00PM	4.0	45.0	27.0	By mobile request
D	09:00PM	7.0	52.0	29.0	By mobile request
E	01:00AM	11.0	-	30	Auto sending
F	06:00AM	3.0	42.0	27.0	By mobile request
G	10:00AM	4.0	45.0	28.0	By mobile request

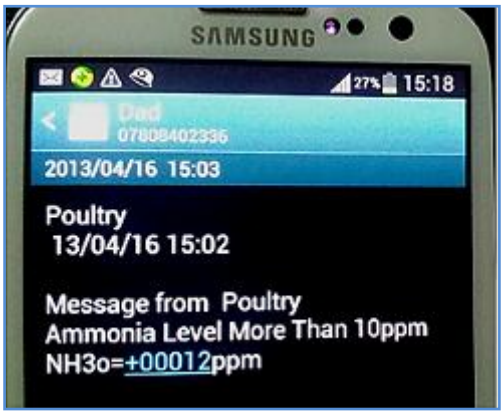

Fig. (7), Phone SMS picture, auto sending (NH3 set point exceeding)

Fig. (8), Phone SMS picture, auto sending (Temperature set point exceeding)

As an experimental test, a wiring disconnection had been occurred for the NH3 sensor cable. The searcher phone received SMS message from the system involves a warning to the wiring disconnection had been occurred for the NH3 sensor, as shown in Fig. 9.

Fig. (9): monitoring critical situation (auto sending mode) of wiring problem case.

Finally, the other rows represent the data sent according to the person in charge request (monitoring normal situation). Fig. 10 shows samples of the sent and received SMS messages for this monitoring situation. Fig.10.a shows the format of the SMS message which has been sent by mobile phone as an instruction to ask the environmental data inside the field, where !R=1 is the code which activates the sending task by the system. The system replay mobile phone through send SMS message immediately after receipt the mentioned instruction code as shown in Fig.10.b. This SMS includes the receipt confirmation of the instruction code from the system through the response code (R=1). After a few second the system sends three separated SMS's to the mobile phone, as shown in Fig.10.(c, d, and e), these SMS messages involve the instantaneous values of NH3, RH, and temperature for each, respectively.

a: the instruction SMS from Mobile phone to System

b: the confirmation SMS from System to Mobile phone.

c: the 1st SMS for NH3 instantinuoese value.

d: the 2nd SMS for RH instantinuoese value.

e: the 3rd SMS for T instantinuoese value.

Fig. (10), monitoring normal situation, mobile request sending mode (acquired data by mobile phone SMS request)

4. CONCLUSIONS

As discussed in this paper, recent technological developments in the automation systems and wireless communication technology have led to the automating the monitoring systems of the ammonia gas, temperature and relative humidity in poultry houses through using smart relay based remote monitoring and control system. This system provides real-time information about the levels of these environmental variables in the poultry houses, as well as provides alerts in cases of increase in their levels to the exceeding threshold limit values. This information can then be used by the authorities to take prompt actions such as send instructing SMS message via the mobile phone to this proposed system in order to operate the ventilation and exhaust fans. Also, using this proposed system in the poultry sector leads to minimize the economic costs of the poultry fields (through reducing losses in birds flocks as a result of the exposure to high levels of these environmental parameters in poultry farms), and reduce the ammonia harm on the people inside the poultry barns, in addition to providing an advance prediction to the state of the poultry field.

5. REFERENCES

[1] Gurdil G. A. K. and Yildiz Y., "The effect of hot climate on concentration of NH3 in broiler and laying-hen houses," Adana, Turkey. 1:1-3, 2000.

[2] Schefferle, H. E., "The decomposition of uric acid in built up poultry litter," J. Appl Bacteriol. 28:412, 1965.

[3] Madelin, T. M., and C. M. Wathes, "Air hygiene in a broiler house: comparison of deep litter with raised netting floors," Brit. Poultry Sci. 30:23-37 and 157-171, 1989.

[4] Inma Estevez, "Ammonia and Poultry Welfare," J. Poultry Perspectives, University of Maryland vol.4 (2):1-2, 2002.

[5] Unit Unggas, "Broiler chicken farming guidelines," Veterinary services, Ministry of Agriculture, (in Malaysian), 2006.

[6] Micheal C. and Brian F., "Relative humidity…The best measure of overall poultry house air quality," J. Poultry Housing Tips, University of Georgia vol.24 (2) 1:9-11, 2012.

[7] Al-Sabki Anwer, "Ammonia gas," J. Chick Clinic Egypt, 3rd periodic: 4-5, 2002.

[8] Anderson D. P., Beard C. W. and Hanson R. P., "The adverse effects on ammonia and chickens including resistance to infection with Newcastle disease viruses," Awan Research 8:369, 1964a.

[9] Carlie F. S., "Ammonia in poultry houses: a Literature review," J. World's Poultry Sci. 40:99-111, 1984.

[10] Xin H., Berry I.L. and Tabler G.T., "Minimum ventilation requirement and associated energy cost for aerial ammonia control in broiler houses," Trans. of the ASAE vol.39 (2):645-648, 1996

[11] Inma Estevez, "Ammonia and Poultry Welfare," J. Poultry Perspectives, University of Maryland vol.4 (2):29-35, 2002.

[12] Moum S. G., Seltzer W. and Goldhaft T. M., "A simple method of determining concentration of ammonia in animal quarters," Poultry Sci. 48:347, 1969.

[13] Gurdil G. A. K., "Confined space hazards: air contaminants in livestock house," (International Scientific Seminars: New Knowledge in Technological Equipment in Agricultural and Food Operations), p. 13-15, 1998.

[14] Anderson D. P., Cherms F. L. and Hanson R. P., "Studies on measuring the environment of Turkeys raised in confinement," Poultry Sci. 43:305, 1964b.

[15] Quarles C. L. and Kling H. F., "Evaluation of ammonia and infectious bronchitis vaccination stress on broiler performance and carrycase quality," Poultry Sci. 53:1592, 1974.

[16] John S.," Smart relays help to cut the cost of controls", M. European Design Engineer, UK, pp.21–22, Apr.2011.