Coding Assisted Carrier Recovery in Nakagami-m Channels using Digital Phase Locked Loop

Basab B Purkayastha
Department of Electronics and Communication Technology
Gauhati University
Guwahati-781014, Assam, India

Kandarpa Kumar Sarma
Department of Electronics and Communication Technology
Gauhati University
Guwahati-781014, Assam, India

ABSTRACT
Bit Error Rate (BER) performance of the modified structure of a Digital Phase Locked Loop (DPLL) based system for dealing with Nakagami-m fading with coded and un-coded channel is presented here. The emphasis of the work is the implementation of Bose, Chaudhuri and Hocquenghem (BCH) channel coding and decoding technique. The performance of the DPLL for carrier reception with signal under certain modulation transmitted through Nakagami-m channels is compared with coded and un-coded conditions. The results of simulation of the proposed DPLL with Nakagami –m fading and QPSK modulation shows that the performance of the system improves significantly upon application of BCH channel coding..

General Terms
Carrier Recovery over Nakagami–m fading channels

Keywords
digital phase locked loop; BCH channel coding; nakagami–m fading channels; least square polynomial fitting filter.

1. INTRODUCTION
The modified structure of a Digital Phase Locked Loop (DPLL) based carrier detection systems for dealing with Nakagami-m fading has already been proposed [1]. BER performance of the DPLL under varied fading conditions including Nakagami–m fading model using QPSK modulation and un-coded channel have been reported. It is found to be comparable to the performance of the existing systems of similar type.

The importance of considering channel coding for error detection is apparent in the design and analysis of communication systems. Channel coding for error detection and correction helps the communication system designers to minimize the effects of a noisy multipath transmission channel [2, 3, 4].

We present here the implementation and related results of BER analysis of the DPLL based system for dealing with Nakagami -m fading using BCH (15,7) channel coding based error detection and correction technique. Results are also compared with the performance of the DPLL based system using un-coded transmission mechanism. The rest of this paper is organized as follows: A brief discussion has been made on Nakagami –m channel modeling, BCH coding and decoding techniques and QPSK signal modeling in Section 2. Section 3 of this paper briefly describes the already proposed DPLL structures and functionalities. Section 4 deals with proposed system and related experimental results and performance of the system. Finally, the work is concluded in Section 5.

2. BACKGROUND PRINCIPLES
In this work, we present briefly the related notions of Nakagami-*m* fading, BCH(15,7) coded channels and QPSK signal modeling. The following subsections provide certain theoretical aspects.

2.1.1 Nakagami-m Fading Channel
Multipath fading is common phenomena associated with wireless communication systems and it has adverse effect on the quality of signal reception. There are a variety of reasons for this. One of the m\ost common reasons is the relative motion between the transmitter and receiver as a result the path lengths of all the signals being received are changing. Another reason may the line-of-sight between the transmitter and receiver is blocked by obstacles as a result the receiver is receiving multiple copies of the delayed version transmitted signals after series of reflections and scatterings. Multipath reception may also occur when the objects around the receiver are not stationary. Due to the existence of a great variety of fading environments, several statistical distributions have been proposed for modeling of fading channel envelopes under short-term and long-term fading conditions [2, 3, 4].

We have considered Nakagami-*m* based slowly-varying flat-fading channel model to evaluate the performance of the modified structure of the DPLL for carrier detection. Using the Nakagami-*m* based model, it is possible to model signals in severe, moderate and light to no fading environment. The probability distribution function of Nakagami-*m* distribution is given by:

$$p(r) = \frac{2}{\Gamma(m)}\left(\frac{m}{\Omega_p}\right)^m r^{2m-1}\exp\left(-\frac{mr^2}{\Omega_p}\right) \qquad (1)$$

Where r is Nakagami envelope, $\Gamma(.)$ is a gamma function, $\Omega_p = E\left(r^2\right)$ is the instantaneous power and $m = \frac{E(r^2)}{\mathrm{var}(r^2)}$, the fading figure or shape factor.

Using Nakagami-*m* distribution we can model signals in severe to no fading environment via controlling its adaptive parameter *m*. Rayleigh fading signal can be modeled defining parameter $m = 1$, with an exponentially distributed instantaneous power. For $m > 1$, the fluctuations of the signal strength are reduced as compared to Rayleigh Fading. For m = 0.5, it becomes one-sided Gaussian distribution and

for $m = \infty$, the channel becomes impulse i.e. no fading. We have used Sum-of-Sinusoids Technique to model Nakagami - *m* fading channel.

2.1.2 BCH (15,7) Coding and Decoding

BCH codes are a large class of cyclic codes that include both binary and non-binary codes. Binary (*n*, *k*), with any positive integer $m \geq 3$, BCH codes can be constructed with the following parameters:

$$n = 2^m - 1, \quad n - k \leq mt, \quad d_{\min} \geq 2t + 1 = \delta \qquad (2)$$

where *t* is the error correcting capability and δ is called the code design distance. That is a BCH code with specified parameters given in (1), guarantees to correct *t* or less number of errors in the received *n* block bits. We have chosen BCH (15, 7) schemes, which has a code length of 15 and message length of 7 and it can be used to correct a maximum of 2 errors out of 15 code bits. There are many algorithms for decoding BCH codes, which are already in circulation in open literature [5] [6].

2.1.3 BCH (15,7) Coding and Decoding

The *Quadrature Phase Shift Keying* (QPSK) signal modulation scheme in order to evaluate the performance of the proposed DPLL. QPSK is the most widely used phase modulation scheme and has applications that range from voice-band modems to high-speed satellite transmissions. The QPSK signals are defined as follows:

$$s_i(t) = A\cos(2\pi f_c t + \theta_i), \qquad (3)$$

$$0 \leq t \leq T, \quad i = 1, 2, 3, 4$$

where $\theta_i = \dfrac{(2i-1)\pi}{4}$

The four available phases are therefore $\frac{\pi}{4}, \frac{3\pi}{4}, \frac{5\pi}{4}, \frac{7\pi}{4}$

3. PROPOSED DPLL BASED SYSTEM FOR CARRIER RECOVERY IN NAKAGAMI-m CHANNELS

The modified structure of the DPLL has three major components, namely, Least Square Polynomial Fitting Block (LSPF), Roots Approxiator (RA), and Numerically Controlled Oscillator (NCO). The block diagram of the DPLL is shown in the Fig.1 with dashed boundary. The system performs using uniform sampling with moderate sampling frequency. The proposed DPLL performs in piece-wise manner. It accepts signal samples for one symbol period at a time, and does further processing. Here we include a brief description of the functionalities of the major components of the DPLL.

We are replacing the traditional Phase Frequency Detector (PFD) of a DPLL with Least Square Polynomial Fitting (LSPF) block because, it can take care of functionalities of two major components of a traditional DPLL, namely signal conditioning and phase frequency detection. It has two inputs, the frequency count of local reference signal and the other one is the incoming input signal. We have found that the sixth order polynomial fitting can generate a good estimate of the QPSK modulated sinusoid signal under effect of additive noise and multipath path fading channel [7].

If $(t_1, y_1), (t_2, y_2) \cdots (t_n, y_n)$represents the faded signal samples then by applying least square polynomial fitting, above faded signal samples can be best fitted to polynomial of degree 6, provided $n \gg 7$, so that the sum of squared residuals S is minimized.

$$\hat{y} = a_0 + a_1 t + a_2 t^2 + a_3 t^3 + a_4 t^4 + a_5 t^5 + a_6 t^6 \qquad (4)$$

$$S = \sum_{i=1}^{n} [\mathrm{y_i} - \hat{y}_i]^2 = \sum_{i=1}^{n} [\mathrm{y_i} - (a_0 + a_1 t + a_2 t^2 + a_3 t^3 + a_4 t^4 + a_5 t^5 + a_6 t^6)]^2 \qquad (5)$$

By obtaining the partial derivatives of S with respect to $a_0, a_1 \cdots a_6$ and equating these derivatives to zero, the following matrix equation is defined:

$$\begin{bmatrix} n & \sum t_i & \sum t_i^2 & \sum t_i^3 & \sum t_i^4 & \sum t_i^5 & \sum t_i^6 \\ \sum t_i & \sum t_i^2 & \sum t_i^3 & \sum t_i^4 & \sum t_i^5 & \sum t_i^6 & \sum t_i^7 \\ \sum t_i^2 & \sum t_i^3 & \sum t_i^4 & \sum t_i^5 & \sum t_i^6 & \sum t_i^7 & \sum t_i^8 \\ \sum t_i^3 & \sum t_i^4 & \sum t_i^5 & \sum t_i^6 & \sum t_i^7 & \sum t_i^8 & \sum t_i^9 \\ \sum t_i^4 & \sum t_i^5 & \sum t_i^6 & \sum t_i^7 & \sum t_i^8 & \sum t_i^9 & \sum t_i^{10} \\ \sum t_i^5 & \sum t_i^6 & \sum t_i^7 & \sum t_i^8 & \sum t_i^9 & \sum t_i^{10} & \sum t_i^{11} \\ \sum t_i^6 & \sum t_i^7 & \sum t_i^8 & \sum t_i^9 & \sum t_i^{10} & \sum t_i^{11} & \sum t_i^{12} \end{bmatrix} \begin{bmatrix} a_0 \\ a_1 \\ a_2 \\ a_3 \\ a_4 \\ a_5 \\ a_6 \end{bmatrix} = \begin{bmatrix} a_0 \\ \sum t_i y_i \\ \sum t_i^2 y_i \\ \sum t_i^3 y_i \\ \sum t_i^4 y_i \\ \sum t_i^5 y_i \\ \sum t_i^6 y_i \end{bmatrix} \qquad (6)$$

From this equation the set of coefficients $a_0, a_1 \cdots a_6$, which are the unique solution of this system are obtained. The coefficients of best fit polynomial function of the noisy faded signal are measures of the phase and frequency associated with that signal. LSPF does three jobs. *First*, it equates the coefficients of best fit polynomial function to the incoming faded signal. *Second*, with the use of the coefficients of polynomial function it generates the best fit signal samples free from ripples. *Third*, LSPF feeds the value the coefficients of best fit polynomial function and the frequency count of local reference signal to Root Approximator (RA) for further processing. The RA is the next major component in the proposed DPLL. It takes the value of the coefficients of best fit polynomial function and computes the roots of that polynomial function. Roots of the polynomial function carry the phase and frequency information of the fitted signal. Given an degree polynomial, the roots can be found by finding the eigen values of the following matrix:

$$\begin{bmatrix} -a_1/a_0 & -a_2/a_0 & -a_3/a_0 & -a_4/a_0 & -a_5/a_0 & -a_6/a_0 \\ 1 & 0 & 0 & 0 & 0 & 0 \\ 0 & 1 & 0 & 0 & 0 & 0 \\ 0 & 0 & 1 & 0 & 0 & 0 \\ 0 & 0 & 0 & 1 & 0 & 0 \\ 0 & 0 & 0 & 0 & 1 & 0 \end{bmatrix} \qquad (7)$$

And then corresponding roots can be computed by the following formula:

$$r_i = \frac{1}{\lambda_i} \qquad (8)$$

After evaluating the roots, the RA performs three additional jobs. It arranges the roots in ascending order and calculates the time period of fitted signal from difference of any two alternate sorted roots values. From this time period RA calculates the frequency associated with fitted signal. Among the sorted roots RA computes the first positive to negative zero crossing root, which signifies the phase associated with fitted signal samples. RA feeds two information namely Frequency Count, Phase Count to NCO for further processing. The NCO takes phase and frequency information from RA as input and adjust its local reference signal's phase and frequency and outputs a new reference signal. As the DPLL is

proposed for QPSK modulation scheme, it is expected that the frequency of the signal will not vary much, only the phase of the carrier associated with each symbol will vary, so we propose a new type of NCO having two outputs. The first output will be frequency corrected zero phased sinusoidal signal, and the second output will be frequency as well as phase corrected signal which will be applied as demodulator input.

4. EXPERIMENTAL CONSIDERATION, RESULTS AND DISCUSSION

After testing each block independently as described above, an experimental model is created integrating each block which represents a complete communication scenario. QPSK signal is generated by modulating a sufficient numbers of random binary bits coded with BCH(15,7) schemes with a carrier and transmitted over Nakagami channel under various fading conditions. At receiver, captured signal is converted to digital form. Frame of received data corresponding to one symbol period is passed through LSPF one by one, which fits the received data frame to best fit signal sample using 6th degree polynomial approximation using LS method. Output of LSPF block is applied to the RA. The RA equates the set of roots of the best fit polynomial function and feeds to NCO. Based on the roots, NCO produces two outputs, one the frequency adjusted signal that is applied to PFD as new reference signal and the other, the phase frequency corrected signal that is applied to QPSK demodulator block. QPSK demodulator recovers the incoming signal frame to binary bits. Next is the BER calculation block. BER calculation have been done twice, both before and after the demodulated bits been passed through the BCH (15,7) decoder for error detection and correction. BER block has two inputs, one is the modulating random binary bits from QPSK modulator and the other is the demodulated binary bits from QPSK demodulator. This block counts number of error that taken place. The demodulated binary bits from QPSK demodulator are then passed through BCH (15,7) decoder for error detection and correction. BER calculation again done on decoded binary bits to the modulating random binary bits from QPSK modulator.

The system has been simulated for counting bit errors occurred during reception and demodulation of 75000 transmitted BCH (15, 7) coded binary bits with carrier frequency 900 *MHz.* We have generated different sets of Nakagami distributed channel parameters representing various fading conditions with value of *m*, the fading channel parameters have been chosen to be *0.5,1.0, 2.0* and *3.0*. Then, each of these sets is multiplied with signal samples to result faded signal sets of different fading figure. Now to each of the faded signal set AWGN is added with SNR value ranging from *-20dB* to *20dB* to produce further multiple sets of faded noisy signal sets, each representing combination of different fading conditions and different SNRs of received signal. The received signal samples are allowed to pass through the DPLL. Output of DPLL converted back to binary bits after necessary demodulation. Bit Errors occurred are counted. Demodulated binary bits are then passed through BCH (15, 7) decoder for error detection and correction. These decoded binary bits are again compared to the modulating binary bits, to count the bit errors after error detection and correction. BER performance of the DPLL is represented by a BER VS SNR plots shown in Figs.2 [A, B, C, D] for various values of Nakagami fading with different values of m both under coded channel and un-coded situations. From the plots, we can conclude that under BCH (15, 7) coded channel case system performance improves significantly as compared to un-coded channel case. Experimental results show that around 5dB SNR, there is 35% to 63% coding gain which is significant.

5. CONCLUSION

In this paper, we have analyzed the performance of modified structure of a DPLL for carrier detection under various fading conditions under for coded and un-coded channel case. It has been found that the systems performance improves significantly upon application of BCH channel coding. This work can be extended further by combining carrier and symbol recovery which shall make it suitable for application with upcoming wireless and mobile systems.

6. REFERENCES

[1] B. B. Purkayastha, and K. K. Sarma. 2012 “Digital Phase Locked Loop based System for Nakagami –m fading Channel Model”, International Journal of Computer Applications, vol.42, no9.

[2] J. X. Luo and J. R. Zeidler. 2000 “A Statistical Simulation Model for Correlated Nakagami Fading Channel”, *Proceedings of the, International Conference on Communications Technology 2000,* Vol.2. Beijing, China. pp. 1680-1684.

[3] H. Suzuki. 1977 “A Statistical Model for Urban Radio Propagation”, IEEE Trans. Commn., vol. 25, pp. 673–680.

[4] H. Shang, Y. Han, J. Lu. 2010, “Statistical analysis of Rician and Nakagami-m fading channel using multipath Shape factors,” 2nd International Conference on Computational Intelligence and Natural Computing Proceedings (CINC), Beijing, China, vol.1, pp.398-401.

[5] A. Vardy, Y. Beaposery, 1994, “Maximum likely hood soft decision decoding of BCH codes”, IEEE Transactions on Information Theory, vol. 40, pp. 546 – 554.

[6] H. Chen, T. A. Gulliver, W. Li, H. Zhang, 2006, “Performance of Ultra-Wideband Communication Systems using DS-SS PPM with BCH Coding over a Fading Channel,” IEEE Military Communications Conference, MILCOM, 2006 Washington, DC.

[7] B. B. Purkayastha, and K. K. Sarma, 2012, “A Digital Phase Locked Loop for Nakagami –m fading Channels using QPSK modulation schemes,” 2nd IEEE National Conference on Computational Intelligence and Signal Processing , Guwahati, India, pp.141-146.

Table 1: The number of error bits counted for various combinations of Nakagami Channel fading parameter (m) and SNR for 75000 transmitted bits using un-coded and BCH(15,7) coded channel with signal frequency 900 MHz and sampling frequency 9GHz.

Nakagami Channel fading parameter (m)		Numbers of Bit Errors counted for various combinations of Nakagami Channel fading parameter (m)								
		-20 dB	-15 dB	-10 dB	-5 dB	0 dB	5 dB	10 dB	15 dB	20 dB
0.5	Un-Coded	45032	33753	19254	12251	5875	2855	1358	516	135
	BCH(15,7) Coded	63012	43511	22253	11875	5052	2108	825	256	61
1.0	Un-Coded	32509	21208	14253	7051	3375	1353	512	135	29
	BCH(15,7) Coded	40204	25252	7250	6775	2463	862	242	52	11
2.0	Un-Coded	22512	11200	8653	4050	1471	501	152	31	7
	BCH(15,7) Coded	32211	15251	3358	3875	1269	310	79	18	4
3.0	Un-Coded	13501	7213	3351	1932	882	282	65	12	2
	BCH(15,7) Coded	18223	8655	3750	1762	623	172	39	6	1

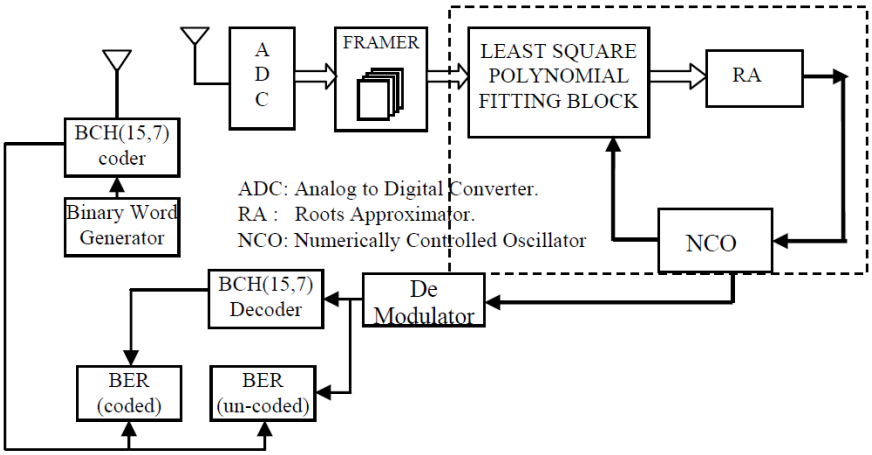

Fig 1: DPLL based Carrier Recovery System for Nakagami-m Channels

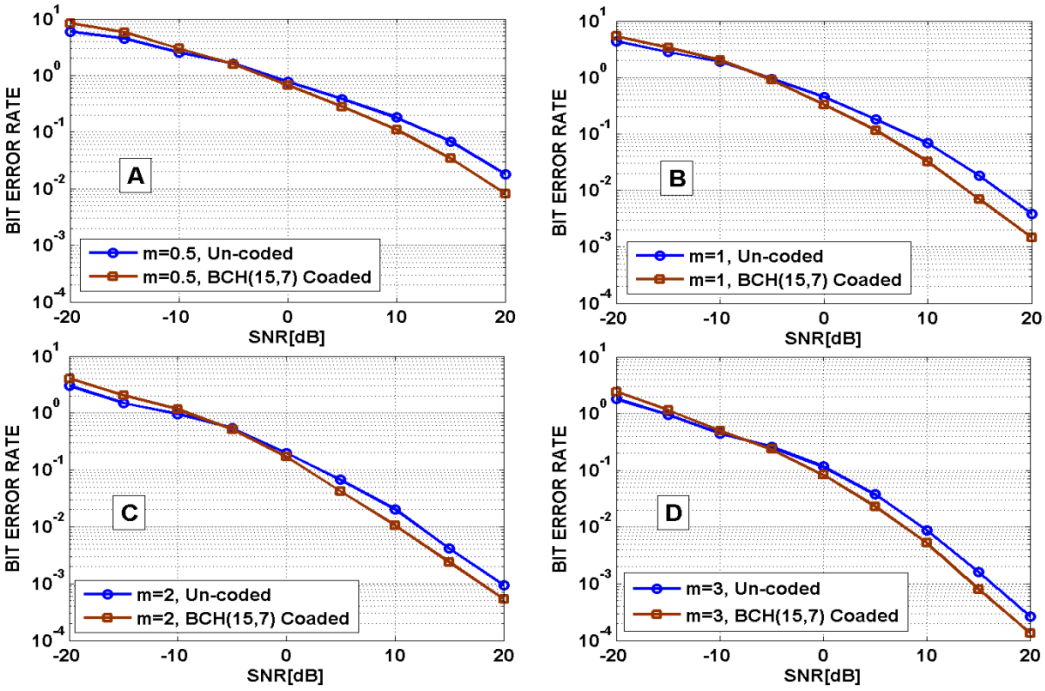

Fig.2[A-D]: BER Vs SNR Plot for various combinations of channel fading figure *m* and SNR for 75000 transmitted bits using un-coded and BCH(15,7) coded channel with signal frequency 900 MHz and sampling frequency 9 GHz