Selection and Modeling of PMBLDC Motor for Torque Ripple Minimization

S.Manivel
Dept. of EEE
K.S.Rangasamy College of Technology Tiruchengode, India

M.Murugan M.E., Ph.D
Dept. of EEE
K.S.Rangasamy College of Technology Thiruchengode

R.Jeyabharath M.E.,Ph.D.
Dept. of EEE
K.S.Rangasamy Institude of Engineering and Technology Namakkal, India

ABSTRACT
The main objective of this research paper is to deliver the selection criteria of PMBLDC Motor for certain industrial applications. In general, Industries uses large Horsepower (HP) Brushless DC Motors as the special drives. These motors offer low starting currents with high starting torque, and the ability to supply reactive KVA to the plant system if desired. For specific industrial applications, the following selection criteria's are considered for PMBLDC drive. Which are Power densities, Speed range, Torque per unit Current, Feedback devices, Inverter Rating, Cogging Torque, Parameter Sensitivity, Ripple torque. The torque ripple is one of the major problems existing in the PMBLDC Motor which depends on Back Electromotive Force (EMF). The back EMF is constant in the conduction region. This paper also concentrates on the mathematical modeling of BLDC motor in a manner suitable to ripple torque analysis using MATLAB software tool.

Keywords
Brushless DC Motor, Selection criteria, Torque ripple.

1.INTRODUCTION

THE brushless dc motor (BLDCM) has trapezoidal electromotive force (EMF) and quasi-rectangular current waveforms. BLDC Motor is a type of Synchronous Motor. This means magnetic field generated by the stator and magnetic field generated by the rotor rotates at the same frequency. DC motor also known as electronically commutated is synchronous electric motors powered by direct current electricity and having electronic commutation systems, rather than mechanical commutators and brushes. The current-to-torque and voltage to speed relationships of BLDC motors are linear (5). BLDC motors may be described as stepper motors with fixed permanent magnets and possibly more poles on the stator than the rotor. The latter may be without permanent magnets, just poles that are induced on the rotor then pulled into alignment by timed stator windings. BLDC motors are popular because they are fast, noiseless, efficient, and exhibit a longer operating life. BLDC motors are also popular due to their compact size, controllability, high efficiency, low EMI and high-reliability. Their compact size is a direct result of technological advances in magnets that deliver efficiency improvements [1]-[6]. When such large horsepower drives are required, attention is focused on the advantages and disadvantages of the synchronous motor compared with the large induction motor. Motor manufacturers have improved machine performance and reliability by years of development of better materials and manufacturing methods. In recent years they have overcome some of the problems associated with synchronous motor operation. When such large horsepower drives are required, attention is focused on the advantages and disadvantages of the synchronous motor compared with the large induction motor. This paper uses these criteria to analysis for particular application. Some of the criteria used include power density, torque per current, speed range, feedback devices, inverter rating, cogging and ripple torques, and parameter sensitivity. The Brushless dc motor drive has the following advantages over other type motor drives.

1. Larger field weakening range
2. Lower cogging torques
3. Much higher rotor operating temperatures that are allowed in BLDC motors than in PM motors [7]-[10]

The paper is organized as follows: The selection criteria for BLDC motor and torque ripple reduction of BLDC motor by input voltage varying method. Development, Brushless generator, Brushless motors, Checking Procedure, Operating Experience and Cost Comparison in section II. Power density, speed range, Torque per unit current, Feedback devices, Inverter rating, Cogging torque, Parameter sensitivity, Ripple torque III. Modeling of PMBLDC motor section IV. Conclusions V

2. BRUSHLESS DC MOTOR

2.1 Development

The principal disadvantage in the use of a synchronous motor concerns the field finding, and the collector ring and brushes required to deliver direct current to the field, Insulated field winding are made as reliable as stator winding. Brushes and collectors can be enclosed with the entire motor. So the brushes and collector rings are eliminated, and also maintenance problem can be eliminated.

2.2 Brushless Generator

Brushless excitation began with brushless generators. The output of an exciter is on its rotating armature. A rectifier unit turning with the armature converts alternating to direct current for the generator field. The diodes are subject to the centrifugal forces of rotation and are rigid and durable for this type service.

2.3 Brushless Motor

Brushless motors can be applied wherever synchronous motors are preferred, and with brush problems removed. The advantages of a brushless motor built support its use in many applications.

2.4 Checking procedure BLDC

Determine that the exciter field current has not ceased. The dc supply to this field may have tripped momentarily. Look for obvious insulation damage to the ac exciter and leads to the diodes.

- Check for loose or grounded power and control leads particularly at the lead supports. Place jumpers across diodes and thyristors and use a 500-volt "megger."
- Remove the jumpers and check for diode and thyristors shorts with an ohmmeter. Thyristors are checked for proper gating, using two ohmmeters or an ohmmeter and bat try.
- Control models are factory calibrated and should require no adjustment in the field.

2.5 Operating Experience

The nearly 100 brushless motors built by Westinghouse in the last many years have served about 75 motors years of operating service in numerous industries and application. Chemical and petrochemical industries use brushless motors to drive compressors of gas and air. Low speed reciprocating compressors are directly driven. High speed compressors are driven through gears by 1200 r/min brushless motors. Utilities have used brushless motors for circulating water pump drives. Paper mills are driven by brushless motors.

Cost of brushless and non brushless motors will influence many decisions on the use of brushless motors. The user must decide whether elimination of brush and collector problems is worth the cost. Apparently many users have decided in favor of the brushless motor.

3. APPLICATIONS CHARACTERISTICS OF THE BLDC

3.1 Power Density

In certain high performance applications like robotics and aerospace actuators, it is preferable to have as low a weight as possible for a given output power. The power density is limited by the heat dissipation capability of the machine, which in turn is determined by the stator surface area. This increases the d axis reluctance, hence reducing its inductance. This means that maximum torque is produced at an angle greater than 90 degree. If a δ of 90 degree is chosen for the buried or inset machines, the reluctance torque is forced to be attained. In the case of the BLDC that requires trapezoidal currents for constant torque, the losses are given by $3(\sqrt{2}Ip2\ /\sqrt{3})2\ Ra$, where Ip2 is the peak of the trapezoidal current. Hence assuming that the core losses of the machine is given below and power density is determined by the copper losses

$$\frac{Ip2}{\sqrt{3}} = 1.15\ Ip2$$

The capable of supplying 15% more power than the other motor from the same frame size that is the power density can be 15% large, provided the core losses are equal.

3.2 Torque per unit Current

Very often, servo motor drives are operated to produce the maximum torque per unit current out of the machine. This is done because by minimizing the input current for a given torque, the copper, inverter, and rectifier losses are minimized. In addition, lower current ratings of the inverter and rectifier are needed for a given output; this reduces the overall cost of the system. The torque is depends on the current ripple in the conduction region of the three phase inverter.

3.3Torque to Inertia Ratio

By comparing other type of motors, the BLDC motor 15% more electric torque. And also the torque to inertia ratio of the BLDC motor can be as 15% higher than the other motor.

3.4 Speed range

The magnitude of I_s=I_q. Which is the vector sum of direct and quadrature axis stator current (Id+Iq). Air flux weakening, which is opposing stator and rotor flux. Steady state operation, which can excluded for short periods of time during transients.

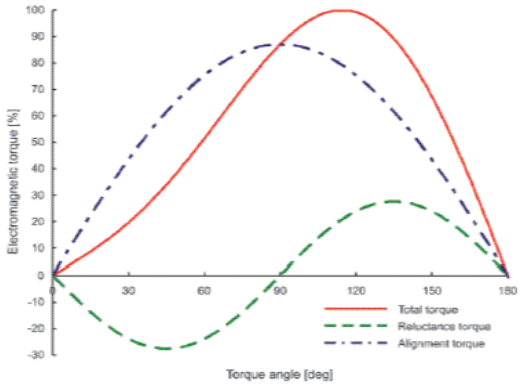

Fig.1. Show that Torque Angle and Electromagnetic Torque

3.5 Braking

The BLDC motor have permanent magnet excitation, braking in inherently easier than with drives that face the possibility of loss of excitation due to a power , failure. Hence, all the advantages and disadvantages those apply to the BLDC.

In BLDC motor, the braking can be achieved by adding resistor in series with a transistor, which is connected just before the inverter power circuit. During motoring operation, this transistor is off, thus disconnecting the resistor from the supply. During braking, the rectifier is turned off, and the braking transistor is turned on in conjunction with the inverter power transistor. The trapped energy in the motor forces a current to flow through the motor coils and through the braking resistor. Braking is achieved by the dissipation of heat in the braking resistor.

3.6 Parameter Sensitivity

Parameter changes in all electrical machines occur due to changes in temperature, current level, and operating frequency. In BLDC motor, an increase in temperature results in a partial loss of flux density of the permanent magnets and an increase in stator resistance. If the BLDC machines are rated at the maximum operating temperature then at ambient temperature, higher than rated output would be obtainable due to increase in flux density relative to the rated condition.

4. MODELING OF BLDC MOTOR

The extraction of torque and ripple requires the mathematical model. In three phases stators winding the phase variable are given.

$$[v] = [R][i] + p[L][i] + [e] \qquad (1)$$

Where vectors,

$$[v]^T = [v_a v_b v_c],$$
$$[i]^T = [i_a i_b i_c]$$
$$[e]^T = [e_a e_b e_c]$$

Here the resistance and inductances are given by

$$[R] = \begin{bmatrix} R & 0 & 0 \\ 0 & R & 0 \\ 0 & 0 & R \end{bmatrix}, [L] = \begin{pmatrix} L_a & L_{ba} & L_{ca} \\ L_{ba} & L_b & L_{cb} \\ L_{ca} & L_{cb} & L_c \end{pmatrix}$$

Assuming a symmetrical structure of the inductance

$$L_a = L_b = L_c = L$$
$$L_{ca} = L_{cb} = M$$
$$[v] = [R][i] + P[L][i] + [e]$$
$$where$$
$$[L^{'}] = \begin{bmatrix} L & M & M \\ M & L & M \\ M & M & L \end{bmatrix}$$

In three phase system without a neutral $I_a+I_b+I_c=0$,hence the motor current equation may be written The set of differential equations mentioned defines the developed model in terms of the variables and times as an independent variable. The torque ripple is generated due to the current ripple. This current ripple is depends on the stator winding impedance and back electromagnetic force.

$$P[L^{-1}] = [L^{''}]^{-1}\{[V] - [R][i] - [e]\}$$
$$where,$$
$$[L^{''}]^{-1} = \begin{pmatrix} 1/(L-M) & 0 & 0 \\ 0 & 1/(l-M) & 0 \\ 0 & 0 & 1/(L-M) \end{pmatrix}$$

The electromagnetic torque (T_e), is

$$T_e = e_{a*}i_a + e_{b*}i_b + e_{c*}i_c / W_m \quad (2)$$

The motion equation of the BLDC motor,

$$dw_t / d_t = T_e - T_1 - B\omega_t / J \quad (3)$$

Table1. Specification of BLDC motor

Rating	2.0 hp
Number of pole	4
Type of connection	Star
Rated speed	150 rpm
Rated current	4A
Back EMF constant	2.8W
Inductance	0.0052H/phase
Moment of inertia	0.013Kg-m^2

5. SIMULATION RESULTS

In brushless dc motor, the armature current is commutated; the current ripple is generated due to the stator winding inductance and deviation of back electromagnetic force. Simulation result for Input dc voltage, Stator current, Stator back EMF, Rotor speed, Electromagnetic torque, Line-Line voltage. This all waveforms are lot of pulsating torque high distortion. This ripples are rectify by input voltage varying method.

The parameter of 500 W BLDC motor is represented by Table I and its back-EMF is shown in Fig. 4. The back-EMF is obtained by experiment and inductances of each phase are measured by digital LCR meter. The 500WBLDC motor is simulated by the Mat lab with the parameters of that is not only the BLDC motor but also the inverter. The current waveform of 500 W BLDC motor driven by experiment is shown in Fig. 5 when the pulse width modulation (PWM) duty ratio is 60% and DC link voltage rectified by AC 220 V.

Torque ripple produced in the system is caused by many factors such as cogging torque, interaction between mmf and air gap flux harmonics of mechanical imbalance. Thus it leads to minimization of the motor rated speed. Torque ripple should be minimized in order to obtain rated speed. Torque ripple produced in the system is caused by many factors such as cogging torque, interaction between mmf and air gap flux harmonics of mechanical imbalance. Thus it leads to minimization of the motor rated speed. Torque ripple should be minimized in order to obtain rated speed. The torque ripple is a major factor which affects the efficiency of the motor in means of its energy losses and in reduction of rated speed of the motor. The torque ripple of the system is obtained by different techniques like input voltage varying method, current control algorithm method, and frequency control method, unipolar and bipolar control

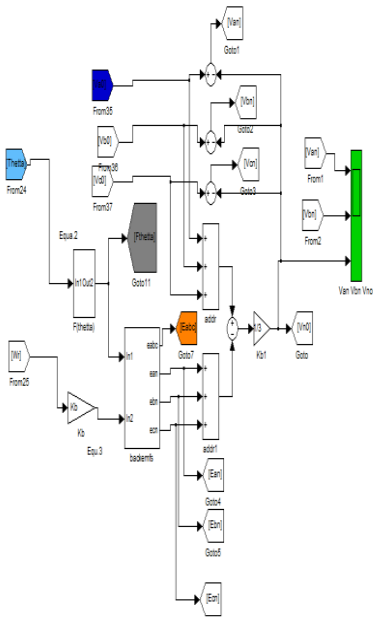

(a)

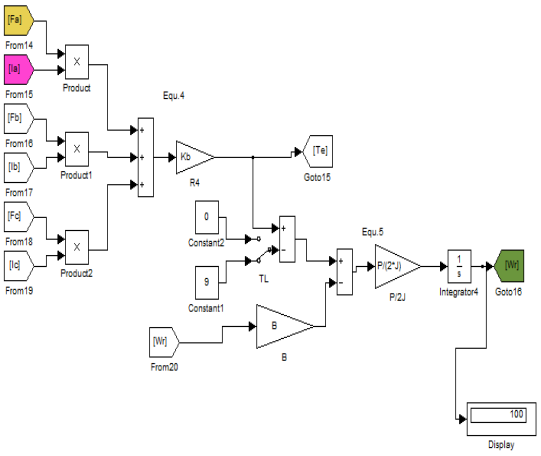

(b)

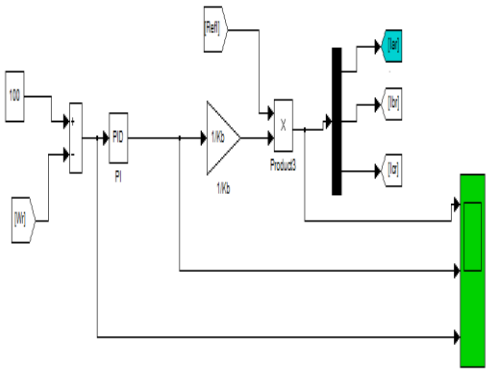

(c)

Fig.2. (a), (b) and (c) are the Modeling of BLDC Motor

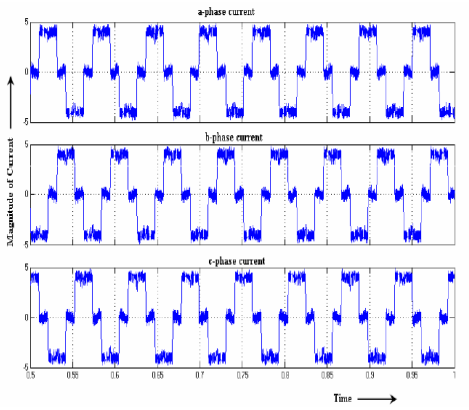

Fig.3 Current Waveform of BLDC Motor

In brushless dc motor, the armature current is commutated; the current ripple is generated due to the stator winding inductance and deviation of back electromagnetic force. The torque ripple is generated due to the current ripple. This current ripple is depends on the stator winding impedance and back electromagnetic force

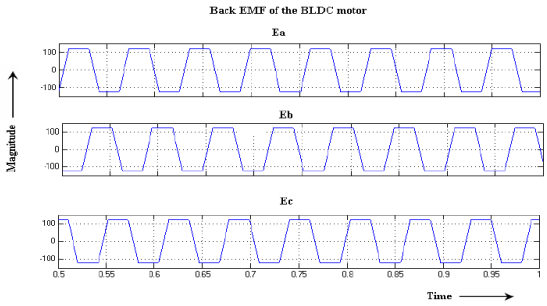

Fig.4 Back EMF of BLDC Motor

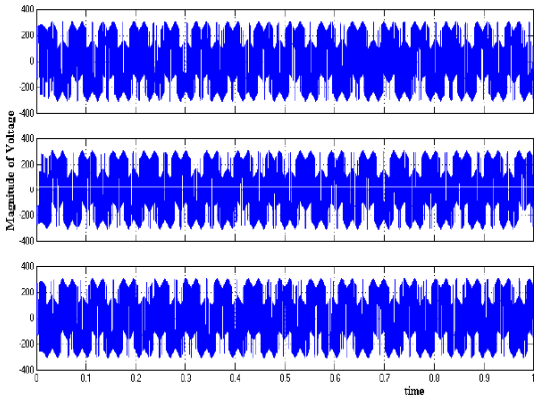

Fig.5 Voltage Waveform of BLDC Motor

The current ripple can be reduced by supplying the appropriate magnitude of input voltage for free-wheeling period. This consists of lot of distortion. The torque ripple is generated due to the current ripple. This current ripple is depends on the stator winding impedance and back electromagnetic force.

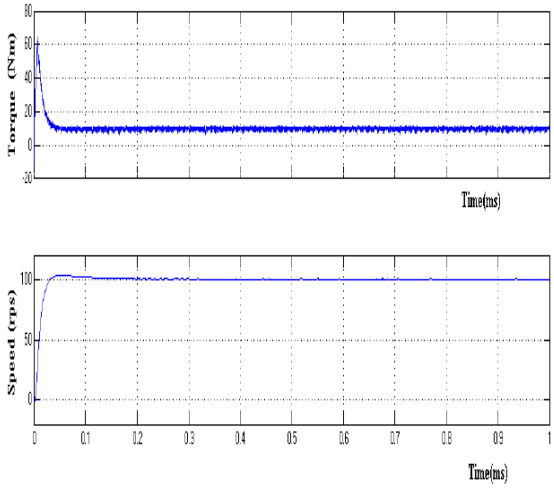

Fig.6 Torque and Speed waveform of BLDC Motor

This pulsating torque will be reduced by input voltage varying method. The figure 5 shows that rotor speed torque characteristics of BLDC motor. The wave form is not uniformly in nature.

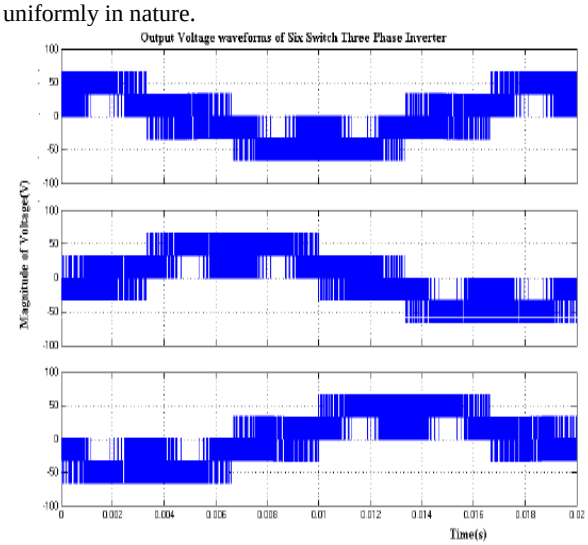

Fig.7 Output Voltage for Three Phase Inverter

The three phase current of Input voltage varying method for brush less dc motor has been simulated. At starting time the distortion is high. When 0.02 sec, the distortion will be reducing. The current ripple can be reduced by maintaining current constant in freewheeling region. If the current of phase b is constant when the commutation is occurred from phase C to phase A, the current ripple is not produced.

6. CONCLUSION

Mathematical modeling of BLDC motor is reviewed in a manner suitable to ripple torque analysis. The theories of current control algorithms and the varying input voltage method are discussed with relevant waveforms and their effectiveness in torque ripple reduction has been evaluated. For the existing strategies the phase current distortion, which is understood as the prime cause for torque ripple has been computed and compared. The varying input voltage method is more efficient in reducing the torque ripples and requires a circuitry to vary the voltage derived from intensive computations

7. REFERENCES

[1] Anandsathyan, (2009)"A Alaincassat, (2009) "New Torque Control Method for Torque Ripple Minimization of BLDC Motors with Un-Ideal Back EMF,'' IEEE Transaction Industrial Electronics., vol. 37, no.4, pp. 8/1–8/4.

[2] New Approach for Minimum-Torque-Ripple Maximum-Efficiency Control of BLDC Motor," IEEE Transaction Industrial Electron. vol. 48, no. 6, pp. 1065–1073,

[3] Cheng Stung Lin, (2005) "Presented Direct Torque and Indirect Flux Control of Brushless DC Motor'', vol. 18, no. 6, pp. 1365–1375, Nov. 2005.

[4] Damodhan, (2010) "A Current Control Scheme with an Adaptive Internal Model for Torque Ripple Minimization and Robust Current Regulation," IEEE Power Application, vol. 152, no. 2, pp. 277–291.

[5] Doo-Hec Jung,(2012) "Torque Ripple Minimization in PM Synchronous Motors Using Iterative Learning Control," IEEE Transaction Power Electronics., vol. 22, no. 2, pp. 644–653

[6] Haifeng Lu, (2004) "BLDC Motor Stator and Rotor Iron Losses and Thermal Behavior Based on Lumped Schemes and 3-D FEM Analysis," IEEE Transaction. Power Electronics, vol. 15, no. 4, pp. 744–752.

[7] Hung-Chichen, (2010) "FPGA-Based Novel Digital PWM Control Scheme for BLDC Motor Drives," IEEE Transaction Industrial Electronics, vol. 53, no. 2, pp. 352–362.

[8] Jian wen show, (2010) "Commutation-Torque-Ripple Minimization in Direct-Torque-Controlled PM Brushless DC Drives," IEEE Transaction Industrial. Application, vol. IA-21, no. 4, pp. 595–601.

[9] Karthikeyan, (2010) "Operating Torque Estimation of High-Speed slot less Brushless DC Machine Considering Power Loss," IEEE Transaction Power Electronics., vol. 19, no. 6, pp. 1635–1645.

[10] Murugan.M, Jeyabharath.R (2012) "An Efficient Active Clamp Resonant DC Link for BLDC Motor System", European Journal of Scientic Research., vol.88, no.4, pp.47-483.

[11] Murugan.M, Jeyabharath.R (2012) "Analysis and Design of Fast Response BLDC Drive System", CIIT International Journal of Programmable Device circuits and System.