An Automatic Integrated Jute Grading Instrument

Gautam Roy, Ph.D
National Institute of Research on
Jute & Allied Fibre Technology
(Indian Council of Agricultural
Research)
12, Regent Park, Kolkata – 700 040.

S.C. Saha, Ph.D
National Institute of Research on
Jute & Allied Fibre Technology
(Indian Council of Agricultural Research)
12, Regent Park, Kolkata – 700 040.

Abstract
Jute, the versatile natural fibre is the second largest natural fibre produced after cotton. Jute being one of the largest foreign exchange earners has a very important role in Indian economy. As far as quality is concerned, jute fibre is usually judged by its suitability for the production of numerous types of yarn and its behaviour in the manufacturing process. The quality however is not uniform and varies from place to place according to the nature of soil, weather conditions, type of water used for retting and the care exercised in subsequent processes. This lack of uniformity in quality has led to the classification and grading of jute with a view to facilitate its marketing and uses. Bureau of Indian Standard (formerly ISI) has formulated certain criteria by which the fibre quality of jute may be evaluated for grading purposes by "Hand & Eye" method. Moreover this method is subjective and assessment of fibre may vary from grader to grader. Hand and eye method of grading is in practice in the market for easy transaction. To do grading in hand and eye method is very difficult for a farmer because there are different sub-groups for each parameter. So the growers are deprived by the purchaser due to their inability to do grading. Therefore keeping the interest of the growers and traders the Automatic Integrated Jute Grading Instrument is developed which is simple and reliable.

Keywords
Jute, Automatic, Grading, Strength, Root content, Defects, Colour, Fineness, Bulk Density

Introduction
System of grading for the assessment of quality of jute fibre was introduced by Bureau of Indian Standards (BIS) in the raw jute trade to ensure remunerative prices to the growers for their fibre quality. But the present BIS jute grading system did not work well with growers due

to many reasons. Keeping this situation in the back ground, the user-friendly jute grading system was developed simplifying the existing system to make it easy, attractive and popular among the farmers. Hope, this system will cater to the need of both the raw jute growers and the various end users.

Present BIS Jute Grading System by Hand & Eye Method

The BIS grading of jute envisages a score card system of grading that aims at eliminating personal bias as far as practicable. Six physical parameters viz., strength, fineness, colour, root content, defects and density of jute fibres are assessed for sorting out the fibre into eight different grades. Relative weightage is given to each physical parameter by standard scoring system and the grade of fibre is determined by total score of the six parameters.

An expert grader can assess the physical characteristics viz., fineness, density and strength of the fibre testing by hand only while visual assessment will judge colour, root content and defects by a close look at the fibre. 'Hand & Eye Method' is generally used in the market for on the spot assessment of the quality and grading of fibres. This method is subjective and assessment may vary from grader to grader. To eliminate this error we developed an integrated jute grading instrument.

Instrumental Jute Grading Method
In this method all the five physical parameters of fibre essential for determining grade are measured by fibre testing instruments. The hand and eye method is a subjective method of assessment and there may be personal error in judgement of quality of a particular lot of fibre. To minimise such variation, instrumental method of grading is essential. For this NIRJAFT, Kolkata has developed the fibre testing instruments for assessing the quality of fibre quantitatively. Bundle Strength Tester, Air-flow Fineness Tester, Colour & Lustre Meter, and Bulk Density Meter were developed for estimate of strength, fineness, colour and bulk density respectively. For Root content the hard barky bottom region was cut and weighed. The root content was expressed in percentage of the total weight of the reeds. For assessment of defects the defective portions such as runners, knots, Specks, centre root, mossy fibre etc were cut from a bundle of fibre reeds and weighed. The weight expressed as percentage of the total weight of the reed bundle give a measure of defects. Total 100 marks have been distributed for the six characters accordingly. Grades were determined as per score marks.

Integrated System of Grading
The proposed grading system will be an integrated system, consisting of hardware and software units. There will be five input units present which will measure the required parameters for grading. All these parameters will be entered automatically to a software unit from which the fibre grade will be determined and display the exact grade of the jute sample under test using Artificial Intelligence System, which is again software and will work on Fuzzy logic system to behave like a human brain.

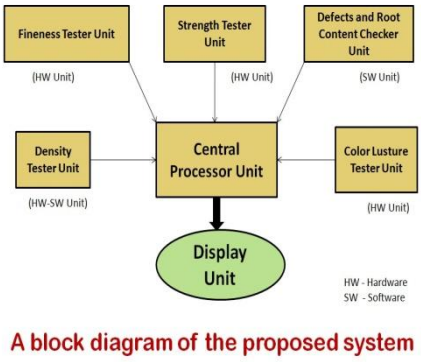

Fig.1 Block diagram of the proposed system

Flow Diagram of the System

- Before acquiring the image, the fibre should be of scannable type, i.e. it should be of *laminar type*.
- To make the fibre scannable we have to pass the flow of jute input through *a fibre pre-processing unit.*

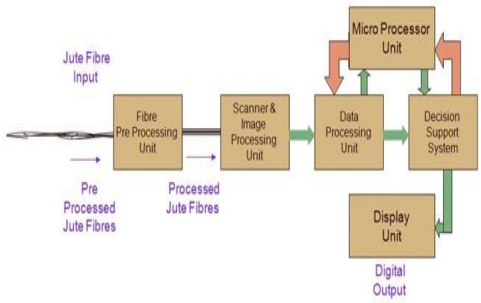

Fig.2 Flow Diagram of the System

Robotic arrangement for Bundle Strength Tester

The ability of the fibres to resist strain to the limit of rupture is called the strength of the fibre. The strength is measured as the breaking load of the fibre sample under test divided by the linear density of the unstrained fibre and is called its tenacity. This is expressed in gm per tex [1- 4].

A robotic arrangement has been designed for bundle strength. Automatically fibre will go to the designed slot and break the bundle of fibres. A dedicated memory unit has been provided in the instrument to store the Breaking Load in Kgf, Tenacity of the fibre under test in gm/ Tex (also known as Quality Index of the fibre). These parameters will be stored in the dedicated non volatile memory unit.

Colour Measurement

Colour means the property of a fibre, which distinguishes its appearance as redness, yellowness, greyness etc [6]. It is largely dependent on retting conditions, water and washing. In order to identify the colour of jute and allied fibres, especially at the time of grading, hand and eye method is used, which is not at all accurate. In precision measurement system, dedicated instruments are used which are very costly. In NIRJAFT, a new method has been developed to find the accurate colour of jute and allied fibres using the image processing system. The system has been proved as a very accurate and reliable system of measurement of colour of jute and allied fibres which is also very economic.

Here, the image of the jute and allied fibre sample is procured. Initially a very expensive Image grabber system has been used for grabbing the images of test samples. Keeping in mind to develop the economical system, the method has been scaled down to scanned images using a normal easily available type scanner.

At first, the colour matrix of the test sample is developed by decomposing the colour components of each pixel to its equivalent RGB form. These components are being checked using a newly developed rule-based algorithm and from the built-in look up matrix. The output is printed on the console.

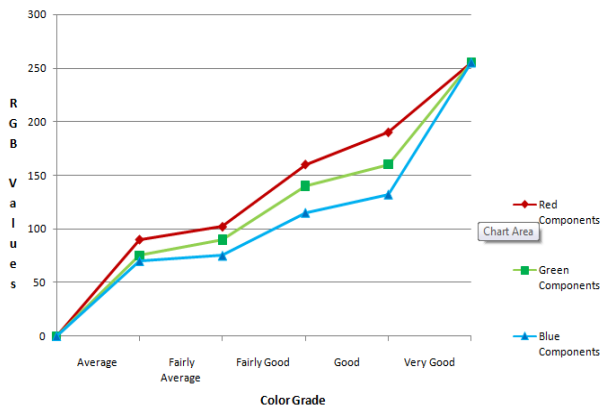

Fig.3 Grading of colour with respect to RGB range

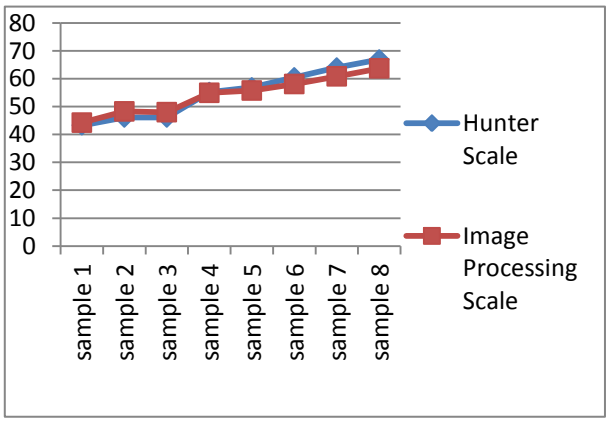

Fig.4 Calibration with Hunter Scale

Fineness Measurement

The fineness is a measure of the diameter (width) or weight per unit length of fibre filament [7, 8]. Fineness is a genetic property and also that depends on plant age at harvest. Fineness can be estimated simply by a close look at the fibre. Finer fibre shows better spinning quality [4, 5].

For measurement of fineness of the Jute fibre, the fibres are aligned in a way that there is overlapping and gaps between them. Then the number of fibres along the width is calculated using image processing from where number of fibres per mm is evaluated. This value is calibrated and with the known Tex value of the fibres. Using this Process over numerous samples, an empherical formula has been developed which gives the direct value of fineness in TEX.

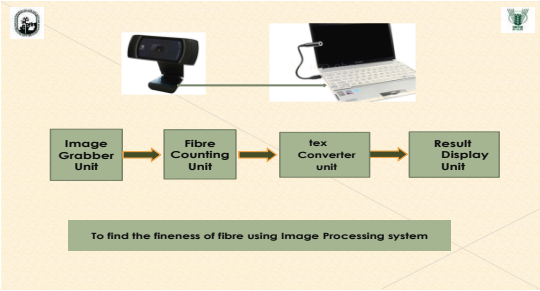

Fig.5 Block diagram of the fineness checker unit

Defects Percentage Measurement

Factors causing serious or partial damage to the quality of fibre are commonly known as defects. To analyze the Defects percentage using Image Processing, the Color Gradient i,e dC/dx over a particular pixel area is evaluated. Thus by calculating the total area under Defects and comparing it with the total pixel area, the percentage of Defect can be achieved.

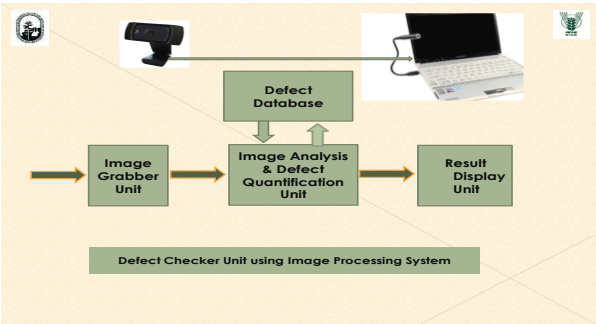

Fig.6 Block diagram of the defect checker unit

1.

Density Measurement

Weight per unit volume of fibre considering all air space in the fibre is the measure of density [6]. The density is judged by the feel of heaviness or lightness of a number of reeds from the middle region of bulk, held within a grip between two hands and raised up and down. The sample that feels compact and weighty is graded as 'heavy body' and loose and less weighty one is 'medium body'. Heavy bodied sample generally spin into good quality yarn. A hardware/software unit finds the bulk density of the jute sample under test.

Root content Measurement

The hard barky region at the lower end of the reed is called root [9]. The roots are cut at the mill before processing of fibre and in commerce they are known as 'Cuttings'. Measuring the extent of bark along the length of the reed by a scale and doubling the length percentage value of the root content may make an estimate of root content in terms of weight percentage.

Presently we are facing problem to measure root content in-situ in the instrument. For that we are supplying the root content value from outside. When the scanner scans the fibre it includes root content and defects at a time.

Acknowledgement

The authors are thankful to Dr D. Nag, Director, National Institute of Research on Jute & Allied Fibre Technology (NIRJAFT) for his constant encouragement and his permission to publish this article.

References

[1] Gautam Roy & G.K.Bhattacharya, A step towards development of an automatic electronic fibre bundle strength tester, Journal of Textile Association Vol. 64, pp.253-254, No.5, 2004.

[2] G.Roy, G.K.Bhattacharya, S.Sengupta & M.Mukherjee, A new electronic fibre bundle strength tester for jute, The Journal of The Institution of Engineers (India), Vol 89, pp. 10-13, February, 2009

[3] Bandyopadhyaya S B, Chatterjee U and Mukhopadhyaya S K, Predicting the spinning qualities of olitorius – simple test on fibre bundle of jute, Fibres(Natural and Synthetic), 15, pp.295-298, (1954).

[4] Chakraborty B K, The breaking strength of twisted bundles of jute fibre and its relation to spinning quality, Text Res J, 26, pp.17-20, (1956)

[5] Bandyopadhyaya S B, Quality assessment of jute, mesta yarns from their fibre properties, Text. Res. J, Vol 38, pp.310-314, Feb 1968

[6] Booth J E, *Principles of Textile Testing* (Butterworth Scientific, London) 1982, 169.

[7] Bandyopadhyay S B & Sinha N G, An airflow method for the determination of the fibre fineness of jute and mesta, *J Text Inst*, 59, pp.148-151, (1968).

[8] Anderson S L, The air flow method of measuring wool fibre fineness, *J Text Inst*, 45, pp.312-314, (1954).

[9] Mather J N, Comparison of jute fibre and yarn properties, *J Text Inst*, 55, T401-403, (1964).