A Review of License Plate Detection and Recognition Techniques

Anju[1(Student)], Sumit Budhiraja[2(Astt. Professor)]
University Institute of Engineering and Technology
Panjab University, Chandigarh

ABSTRACT
Vehicle license plate detection and recognition is one of the active research areas now a day. There are two main stages in most license plate character recognition systems: features extraction and classification. There are several methods for detection of license plates in various conditions. Features can be extracted through various methods. Artificial Neural Networks are the most popular classification methods used for character recognition systems. In this paper, various techniques for detection and recognition of license plates are discussed.

Keywords: License plate detection, License plate recognition, feature extraction, Neural Networks.

1. INTRODUCTION
With the ever increasing demand of anti-terrorism and public security worldwide license plate detection and recognition systems are used to fight against criminals. With development of transportation technology and the universality of the vehicles, many problems arises such as security control of restricted areas, parking lots management, traffic monitoring etc. therefore, automatic vehicle license plate management system has become a popular subject. License plate is the ID of a vehicle. License plate recognition system consists of three stages. First stage is locating the license plate from the input image i.e. license plate extraction. The second stage is extracting the characters and third stage consists of character recognition. Therefore, as a part of vehicle license plate recognition system, license plate detection is the most important part. As the license plate is detected at correct position then character recognition rate has been greatly increased. In LPR system, License plate detection is the first and fundamental stage. License plate can be extracted through edge based methods, color-based methods, region based methods etc. License plate characters can be recognized by two algorithms: based on template matching and based on artificial neural networks. Template matching method can quickly recognize the character by computing the correlation between the module and the image. But when the license plate has deformation or rotation, the rate of recognition will greatly reduce.

Artificial neural network (ANN) is an interdisciplinary method of biology and computer science, which has been widely used in signal processing, pattern recognition, nonlinear optimization and so on. To solve the numerous approaches for license plate recognition have been proposed. Most methods are based on features of the license plates. Features commonly employed have been derived form the license plate format and the alphanumeric characters constituting license plate numbers. The features regarding license plate format include edge, symmetry, color, and texture of grayness. Learning-based methods have widely used in license plate recognition recent years. SVM (Support Vector Machine), ANN (Artificial Neural Networks), AdaBoost and so on.

In this paper, section 2 describes different methods of License plate detection, section 3 describes segmentation and feature extraction of characters, section 4 describes Aritificial Neural Networks, section 5 describes results and section 6 describes conclusion.

2. LICENSE PLATE DETECTION
In order to recognize a license plate efficiently, location and extraction of the license plate is necessary step and this in turn greatly affects the recognition rate and overall speed of the whole system. The vehicles in India sometimes bare extra textual regions, such as owner's name, symbols, popular sayings and advertisement boards in addition to license plate. Situation insists for accurate discrimination of text class and fine aspect ratio analysis. Disparity of aspect ratios is a typical feature of Indian traffic connected component analysis followed by different filtering techniques like aspect ratio analysis and plate compatible filter technique is used to find exact license plate. Most license plate detection (LPD) algorithms adopt vertical sobel operator, a robust and real-time preprocessing method to enhance both edge density and intensity of license plates under various outdoor and indoor environments. This method uses HL sub band feature of 2D Discrete Wavelet Transform (DWT) twice to significantly highlight the vertical edges of license plates and suppress the surrounding background noise[1]. Several candidates of license plates can easily be extracted by first-order local recursive Otsu segmentation and orthogonal projection histogram analysis and the most probable candidates are selected out by edge density verification and aspect ratio constraint. LPD system based on the proposed 2-level 2D Haar DWT is better than that based on conventional vertical Sobel operator or I-level 2D Haar DWT in terms of detection rate.

A fast license plate localization algorithm base on expanded wavelet transforms [2]. This system consists of three major stages. First, a wavelet transform based method is used for extracting important contrast features as guides to search for desired license plates and generating candidate regions in LH sub image. In last stage the license plate is located accurately in HL sub-image. Images taken from various scenes including diverse angles, different lightening conditions. The experiments show that this method correctly detects the region of license plate and the license plate detecting rate of success is 97.31%. The average processing time of one color image is about 0.016s.

Techniques based upon combinations of edge statistics and mathematical morphology featured very good results [3]. A disadvantage is that edge based methods alone can hardly be

Applied to complex images, since they are too sensitive to unwanted edges, which may also show a high edge magnitude or variance. When combined with morphological steps that eliminate unwanted edges in the processed images, the LP extraction rate becomes relatively high and fast.

3. SEGMENTATION AND FEATURE EXTRACTION
After the detection of license plate segmentation is done in which projection profiles of characters are made. Horizontal projection is drawn when the license plate consist of characters in single row. Sometimes, license plate consists of two rows of characters in that case vertical projection profile is drawn to segment the different rows. Horizontal projection profiles are drawn to segment the characters.

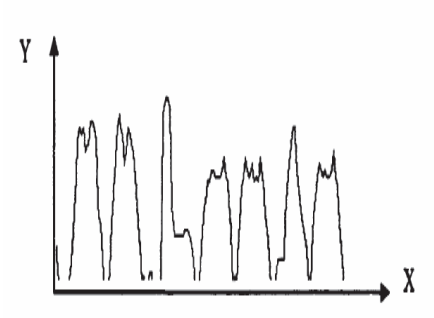

Fig1. Projection profiles of characters

Feature extraction which comes after character segmentation and before character recognition, is one of the key processes in license plate recognition system. Since good features can make the recognition process easier and reduce the error rate. There are several types of features, which have been introduced by former researchers. Features of characters can be categorized into structural feature and statistic feature [4].

Structural features reflect the character's structure information, such as skeleton property, contour feature, stroke feature and topological characteristic. Statistic feature is the most relevant information extracted from the raw data, which minimize the inner-class distance and maximize the between-class distance. The statistic features commonly used are as follow: complexity index, four-edge code, stroke density, meshing feature and transform domain feature. Character's structure feature method has a strong adaptability of character font changes, so it can easily differentiate the similar characters and its computational complexity is large and its ability of anti-interference is bad. Character's statistic feature has advantage of anti-interference and simple algorithm of classification and matching. But it can hardly differentiate the similar characters.

Elastic Mesh feature [5] is one of the common-used characteristics for character recognition. It can be divided into uniform mesh feature and elastic mesh feature. Uniform mesh is a fixed-size sub-grid by evenly dividing the character image according to the size of the grid. It reflects the distribution of characters overall shape, but its ability of location anti-interference is poor. It is a sub-grid whose location is dynamically determined according to the density of character image. When compared to the uniform mesh, elastic mesh has better adaptability while the strokes have some deformation, and it also reflects the character's global feature. The number (n, m) of mesh is determined.

The pixels of each line and each column are calculated

along the horizontal direction and vertical direction,

which to be used as horizontal and vertical projection feature. Direction line element features are used for Chinese characters. Chinese character is composed of four strokes and number of each stroke and their inter-relationship of location can uniquely decide the Chinese character.

Moments can be used for character recognition. The common moments which can be used are Hu moments, Geometrical moments, Legendre moment and Hemite moments and so on [6]. Hu moment is not change to the translation, revolution and scale. The problem is that they are not more smoothed at the window edges. So, for analyzing a signal, it will bring the windows infection. For overcoming the problem, Gaussian Hermite moments are used. The base functions of GHMs are much more smoothed; are thus less sensitive to noise and avoid the artifacts introduced by window function's discontinuity. Since Gaussian-Hermite moments are much smoother than other moments and much less sensitive to noise. GHMs could facilitate the recognition of image. Experiments show that much better results can be obtained by using the GHMs for the image recognition.

Peripheral features ET1 and DT12 are useful in describing both the internal and external structures of character images [7]. In ET1 feature the character image is divided into some horizontal strips and vertical strips. Within each strip, the area between the edge of the image frame and the first black-to-white pixel jump is calculated. ET1 feature is well suited for describing the external shape of characters. DT12 feature depends on the relative positions of the internal strokes of character. So, it is well described the internal structure of each character. The jumping features divide the image from horizon and vertical and calculate every black-to-white jump or white-to-black jump. Summed up the obtained of each strip is jumping feature.

4. ARTIFICIAL NEURAL NETWORK

Artificial neural network (ANN) is an interdisciplinary method of biology and computer science, which has been widely used in signal processing, pattern recognition, nonlinear optimization and so on. It can arbitrarily approach to a highly nonlinear function without predetermined mathematical model. The network can achieve non-linear approximation only through its own learning from a certain amount of samples. In ANN three layers are used one is input layer, hidden layer and output layer.

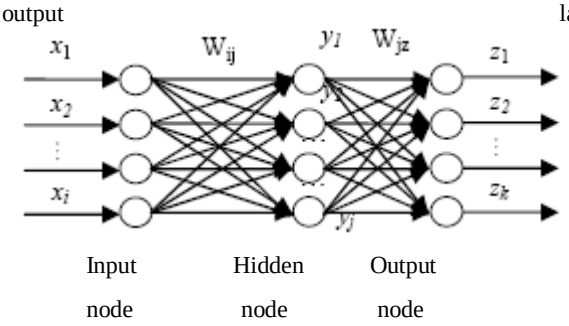

Fig2.Structure of multilayer feed-forward networks

Back Propagation (BP) neural network often trap into the local minimum in the training process, a Genetic Neural Network (GNN) [4], GABP was constructed by combining the Genetic Algorithm GA with BP neural network. The training of the GABP neural network was finished in two steps. The GA was firstly used to make a thorough searching in the global space for the weights and thresholds of the neural network, which can ensure they fall into the neighborhood of global optimal solution. Then, in order to improve the convergence precision, the gradient method was used to finely train the network and find the global optimum or second-best solution with good performance. Experimental results show that the proposed method can save the time of training network and achieve a highly recognition rate.

The momentum is introduced to improve the learning algorithm of BP network in order to overcome the serious defect in BP network learning algorithm that is too slow network convergence [7]. The standard BP algorithm is a simple steepest descent algorithm for static optimization. To improves the convergence use the following improved algorithm.

$$W(k + 1) = W(k) + a[(1-n)D(k) + nD(k -1)]$$

Where, W (k) can express a single connection weight coefficient, but also indicates the connection weight vector.

$$D(k) = -deltaE/ w(k)$$

D (k) is the negative gradient for the moment k, and D (k -1) is the negative gradient of the time k-l, a is the learning rate and a >0. The momentum term reduces oscillations tendency and improves the convergence.

BP neural network weights and node thresholds are optimized by using global optimal search capabilities of improved BP network algorithm, and the momentum item is introduced, which can solve the slow convergence of BP neural network and the problem that BP neural network can easily fall into local minimum. Experiment results show that this method can make the neural network converge fast and stably, and can improve the identification speed and accuracy for license plate character.

SVM multi-class classification method. SVM-based classification algorithms search for the optimal separation plane. This procedure is actually a convex quadratic programming problem under restricted conditions. The decision function is given by:

$$f(x) = \mathrm{sgn}\{\sum_{i=1}^{L} y_i \alpha_i K(x_i, x) + b\}$$

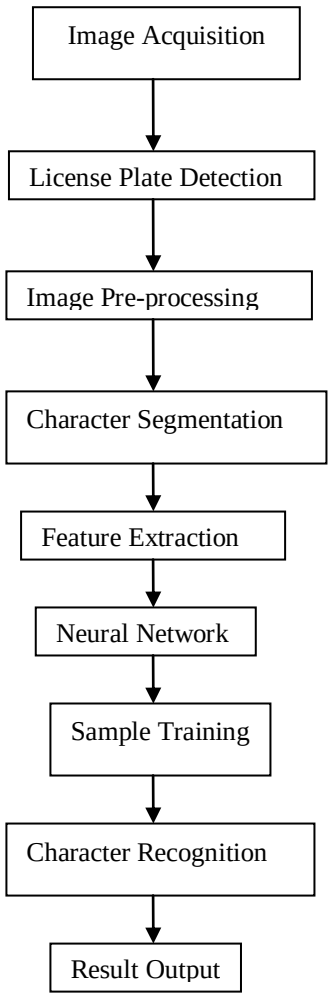

Fig2.License Plate Recognition Flowchart

Radial basis function neural network (RBF) is a local approximation neural network and it is better than back propagation (BP) neural network in such abilities as approximation, classification and study [8]. The design uses RBF as plate character classifier. RBF is a feed-forward neural network and has simple structure. It has self features such as optimal approximation and no local minimum, faster convergent speed and simpler topology structure. RBF neural network is used to recognize characters with the feature vector as input. The results show that this method can recognize characters precisely and improve the ability of license plate character recognition rate.

The probabilistic neural network (PNN) [9] is used for many

Purposes as it has many advantages as compared to the

Back propagation neural network such as speed of training is faster in PNN. It is robust to noise examples. PNN has simple structure and training manner. The advantage of PNN is that training is easy and instantaneous. In this weights are not trained but assigned. Existing weights will never be alternated but only new vectors are inserted into weight matrices when training. It can be used in real-time. Since the training and running procedure in PNN is implemented by matrix manipulation, the speed is very fast the network classifies input vector into a specific class

Because that class has the maximum probability to be Correct. PNN has three layers: the Input layer, Radial Basis

Layer and the Competitive Layer .Radial Basis Layer evaluates vector distances between input vectors and row weight vectors in weight matrix. These distances are scaled by Radial Basis Function nonlinearly. Competitive Layer finds the shortest distance among them, and thus finds the training pattern closest to the input pattern based on their distances.

5. RESULTS

On the basis of different classifiers, recognition rate and recognition time of characters are computed and shown in tables.

Table1. Recognition rate of different classifiers

Classifier	Numerical Rate	Alphabetic Rate	Recognition Time
SVM	93.26%	94.26%	43ms
BPNs	91.57%	90.98%	27ms

Table1 result shows recognition rate of different classifiers [7]. It shows that recognition rate of characters using SVM classifier is more than Artificial Neural Network but using SVM recognition time required is also more.

Table2. Recognition rate of different features

Feature	Numerical rate	Alphabetic rate
28-D ET1	81.46%	80.33%
28-D DT12	64.61%	74.59%
28-D Jumping	72.47%	64.75%
84-D Together	88.20%	86.89%

Table 2 results shows that recognition rate using different features. From table 2 it concludes that numerical and alphabetic rate varies with different features of characters .Recognition rate increases if combination of all features vector is taken at the same time.

6. CONCLUSION

In this paper, various techniques for detection of license plates are discussed. After that several feature extraction and recognition techniques of characters have been studied with their advantages and disadvantages. It is concluded that recognition rate and recognition time of characters using

different classifiers is different. Feature extraction methods also affect recognition rates of characters.

7. REFERENCES

[1] Ming-Kan Wu, ling-Siang Wei, Hao-Chung Shih, and Chian, " License Plate Detection Based on 2-Level 2D Haar Wavelet Transform and Edge Density Verification" IEEE International Symposium on Industrial Electronics ,2009

[2] Kuo-Ming Hung, Hsiang-Lin Chuang, Ching-Tang Hsieh, License Plate Detection Based on Expanded Haar Wavelet transform, Fourth International Conference on Fuzzy Systems and Knowledge Discovery,IEEE,2007

[3] Chirag N. Paunwala, Suprava Patnaik A Novel Multiple License Plate Extraction Technique for Complex Background in Indian Traffic Conditions International Journal of Image Processing (IJIP) Volume (4)

[4] Guangmin SUN, Canhui Zhang, Weiwei ZOU,Guangyu YU,"A New Recognition Method of Vehicle License Plate Based on Genetic Neural Network", 5th IEEE Conference on Industrial Electronics and Applicationsis, pp.1662-1666,2010

[5] BO LIN, BIN FANG, DONG-HUI LI, "Character recognition of license plate image based on multi-classifiers", IEEE International Conference on wavelet analysis and pattern recognition, pp.138-143,2009

[6] Youfu Wu, Yongwu, GangZhou, Jing, Wu "Recognizing Characters Based on Gaussian-Hermite Moments and BP Neural Networks", IEEE International conference on intelligent computation technology and automation pp.992-995, 2010

[7] Zhiwen WANG, Shaozi LI, "Research and Implement for Vehicle License Plate Recognition Based on improved BP Network", IEEE International conference on computer and communication technologies in agriculture engineering, pp101-104, 2010

[8] Baoming Shan, "License Plate Character Segmentation and Recognition Based on RBF Neural Network", IEEE second inter national workshop on education technology and comp uter science pp.86-89, 2010

[9] Vijaya Laxmi , B. M. Karan " Vehicle Identification Automation Using Wavelet-Probabilistic Neural Network Combined Approach", International Journal of Signal and Image Processing (Vol.1)pp 62-68.