A Survey on Performance Optimization of OFDM based System by using Neural Network

Poonam G. Chaudhari
Department of ETC, PCE
Nagpur (MH) -440019, India

Archana Charkhawala
Department of EE, PCE
Nagpur (MH) -440019, India

ABSTRACT
In order to oppose the fading problems in an OFDM communication systems, adaptive modulation techniques have been used for the improved performance. MIMO (Multiple Input Multiple Output) and OFDM (Orthogonal frequency division multiplexing) forms a combination. Both gives a good possibility of being the next-generation (4th generation) of mobile wireless systems. The technology however imposes a challenge that is the increased complexity of channel equalization. Wireless channels are multipath fading channels, It can cause deformation in the signal. Channel impulse response (CIR) is used to remove the effect of deformation in the signal. This CIR is used in receiver provided by a separate channel estimator. The artificial neural network is used with the MIMO-OFDM system for channel estimation. This system is proposed with the back propagation algorithm with the feed forward network. The original sequence of data will be trained by using ANN and observations will be made. ANN is trained for different values of E_b/N_o and used with the receiver circuit. The evaluated results are done by mathematical analysis (FFT and IFFT) in MATLAB.

KEYWORDS
Multi input Multi output(MIMO), Orthogonal Frequency Division Multiplexing(OFDM), Back Propagation algorithm in Neural Networks, Channel Impulse response.

1. INTRODUCTION:
The communication systems have targets like to provide services that include video, voice and data with high speed and reliability. In the present era of high speed communication networks, Orthogonal Frequency Division Multiplexing (OFDM) has been proposed as one of the key technologies for modulation and signal propagation. The research concern focused on its multi-user access method, Orthogonal Frequency Division Multiple-Access (OFDMA). OFDM form of multicarrier modulation, it has recently been applied widely in wireless communication systems due to its robustness to frequency selective fading, inter symbol interference (ISI) and high data rate transmission capability with high bandwidth efficiency. In a mobile radio channel the transmitted signal is distorted during transmission through the frequency and time selective fading channel. If time and frequency dispersive characteristics of channel are known the original bits can be recovered correctly thus Bit Error Rate (BER) is reduced. [10][3] Multiple input multiple output (MIMO) communication system is itself as a technology can obtain high data rates by taking advantage of multipath signals. Both technologies (MIMO & OFDM) give number of advantages. combination of both will be a good possibility of being the next-generation (4th generation) of fixed and mobile wireless systems.[6] Wireless channels are multipath fading channels, which causes ISI (inter symbol interference). In wireless communication channel an independent path delay, independent path gain (or loss) and independent path phase shift will be there for each path. The receiver must be provided with the channel estimator which contain the knowledge of CIR (Channel impulse response). The channel estimation is based on the sequence of bits which is unique for each transmitter. MIMO uses multiple transmit and receive antennas communicating in same frequency band increasing the capacity linearly with the number minimum of transmit and receive antennas. This MIMO-OFDM technology is efficient but it is a complex system. OFDM uses a very large bandwidth in order to exploit the diversity on the subcarriers. There are N subcarriers and the OFDM system modulates each sub-carrier with any of the modulation scheme making the data rate, Rs' equal N bits per symbol[4][2].

The artificial neural network (ANN) structures have been used widely for many applications. A neural network is a mathematical tool have a relationship between input and output data of a system. The performance of OFDM system can be improved with the help of an artificial neural network (ANN) to realize an adaptive modulation of the subcarriers[1]. Channel equalization can be also regarded as a classification task. NN can form decision regions in the space of received symbol sequences. Due to the universal approximation capability, ANN can form arbitrarily shaped decision boundaries. This property defends the introduction of ANN to perform task of equalizers. In recent years ANN have been often proposed for digital equalization of communication channels, In ANN based digital receiver is proposed, which claims that the neural network based receiver achieves better performance in terms of symbol error rate for various SNR values, especially in the case of a Rayleigh multipath channel.[4]

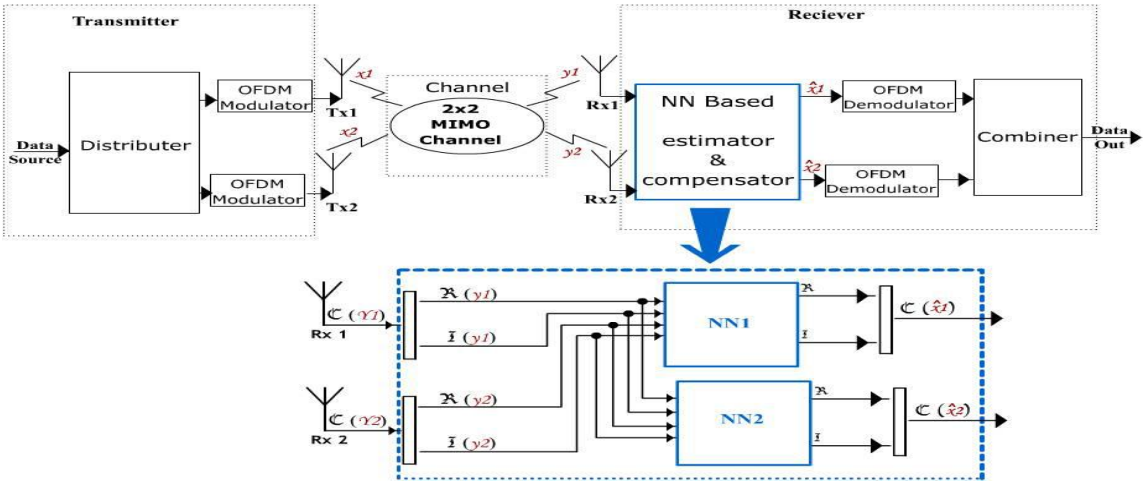

Figure 1:MIMO-OFDM systems with NN based channel estimator & compensator [4]

In ANN based channel estimation technique is proposed for Time Varying Multipath Satellite Channel, showing that the learning algorithm NG (Natural Gradient) can reasonably track the variation of the channel parameters when compared to BPA (Back-propagation Algorithm). In blind channel estimation is done using modified radial basis function, which equalize phase problems more efficiently.

2 REVIEW OF LITERATURE:

Most of the researches did the work on OFDM systems for wireless communication channels. There are many techniques introduced by which the multipath fading can be avoided. Fading in multipath communication can be decreases by using different parameters.

3 PRIOR APPROACHES ON MIMO-OFDM USING ANN:

A system based on Adaptive Modulation in an OFDM Communications System with Artificial Neural Networks which uses are N subcarriers and the OFDM system modulates each sub-carrier with a binary phase-shift keyed (SPSK) symbol, making the data rate equal N bits per symbol. The Power Delay Profile (PDP) is a measure of received signal strength as a function of time. In practice the power delay profile can be measured, and by taking an N-point Fourier transform, with zero padding, the magnitude of the resulting N-values would represent the frequency channel gains of each subcarriers. The ideal channels performance per subcarrier have the same gain, and the fading channels contain some channels which have high gain and other channels have low gain. This results certain symbols having good performance and others having poor performance.

The performance an OFDM system can be measured in terms of the bit-error rate (BER). For an arbitrary fading channel, with N subcarriers, the BER is equal to:

$$BER_{bpsk} = \sum_{1}^{n} Q(2 * \frac{E_b}{N_o} * H_i^2)$$

This BER expression is only valid for all subcarriers modulated to BPSK symbols. For this system, constant data rate, R_s= N bits per symbol and a constant total transmit power OFDM symbol. Normalizing the total transmit power per OFDM symbol to units allow to easily determine how much energy is put into each symbol. So, the energy per symbol is the inverse of the total number of modulated subcarriers. They used adaptive modulation method in order to improve the performance of communication systems. It includes power loading or bit loading. Higher-order modulation schemes are required a bit loading algorithm. Adaptive modulation can be used in an OFDM system to improve the symbol error-probability (SEP).

They used hear adaptive algorithm with the neural networks. The method which is used here is "multi layer perceptron(MLP)". Due to the parallel nature of the feed-forward ANN architecture, we can express the input/output relationship from one layer to the next in matrix form as:

Y=¢(W*X+b)

where X is a N by 1 vector of inputs, W is an M by N vector of weights, b is an M by 1 vector of biases, and Y is the M by 1 vector of outputs. The operator ¢(o) is the element-by-element activation function for each neuron. The neural network training data is based on post- processing Algorithm. A post-processing algorithm is needed to force N-channel to achieve this condition. The algorithm looks for any values in N-channel vector less than zero and sets those to zero. This action is equivalent to not allowing a particular modulation for any of the subcarriers. The algorithm then proceeds to add or subtract a subcarrier to each N-channel until the condition on the data rate is obtain[1].

A system which is based on "Neural Network based MIMO-OFDM Channel equalizer using Comb-Type pilot arrangement" To remove channel effect from the received signal, the receiver needs to have knowledge of CIR (Channel impulse response), which is usually provided by a separate channel estimator. NN based digital receiver is proposed, which claims that the neural network based receiver achieves better performance in terms of symbol error rate for various SNR values, especially in the case of a Rayleigh multipath channel. They proposed a technique, which based on artificial neural networks, carries out (MIMO-OFDM) channel estimation and compensation. NN based estimator & compensator contains two neural networks, which work independently on the received signals to recover signals transmitted from Transmitter antenna1 and transmitteranenna2. These two transmitted signals are divided in two portions with respect to time, first is the pilot sequence (known to receiver) and the other portion contains data sequence to be communicated. Wireless channels are time varying channels so the pilot sequence is transmitted in every transmission burst. For slow and fast fading channels the length of transmission burst may vary, and the channel is assumed to be constant during the time taken by one transmission burst. Length of pilot sequence may also vary in different situations in order to test the credibility of proposed

design. The length of pilot sequence is varied over a given range. Receiver utilizes the known pilot sequence samples and the corresponding received signal samples to calculate the effect of channel for each transmission burst separately. Known pilot sequence may be unique for each transmitter and is transmitted in each transmission burst. *NN* is dedicated to recover the transmitted signal. In order to remove distortion from the received signals data sequences are passed trough the trained neural networks and estimate of the data sequence is obtained at the output of first Neural Network(NN1) and the estimate of the data sequence is obtained at the output of second Neural Network (NN2*).* This technique then implemented by using feed foreword network i.e. by using back propagation algorithm. Major advantage of neural network is that it doesn't require a prior mathematical model. A learning algorithm is used to adjust the synaptic-weights and bias values sequentially by trial and error during the training mode of the neurons. The NN do not have sequential computation, all its neurons perform simultaneously and continuously. Feed-forward MLP (Multi layer perceptron) network is designed and tested to estimate & compensate channel effect. Feed forward networks are those that do not involve any feedback connections and also there is some hidden layer of neurons present between input and output layer. The computation is done by using "weight Matrix". In the process of the process in which weights and bias values of neural networks are updated. According to the proposed system channel estimate is calculated in terms of the weights & bias values. Two different algorithms are used for training the neural networks. The algorithms used for training the neural network are LM (Levenberg-Marquardt) and OSS (One Step Secant) Back propagation. Neural network is provided with the input value and the target value for output, training algorithm calculate the weights & bias values of the network using input and target values provided.[6]

The technique based on "Performance Evaluation of ANN Based Channel Interpolation for OFDM System". The developed the system in order to deal with High speed mobile communication channels. They proposed a system which contain a combo type based channel estimation. Here pilots symbols are inserted into periodically in time or uniformly in frequency.. The pilot based channel estimation can be performed by inserting pilot bits into all of the subcarriers of OFDM symbols with a specific period (block type) or inserting pilot tones into each OFDM symbol (comb type). In comb type pilot based channel estimation an efficient interpolation technique is necessary in order to estimate channel in frequency domain. The interpolation is based on linear interpolation, second order interpolation, low pass (LP) interpolation, spline cubic interpolation, and time domain interpolation. Comb type pilot based channel estimation with low pass interpolation performs the best among all channel estimation algorithms. In this theory, the authors have given low pass interpolation algorithm which performs the best in comb type pilot based channel estimation and it is compared with ANFIS (Adaptive Network Based Fuzzy Inference Systems) and GRNN (Generalized Regression Neural Networks) neural network structures. The performances have been compared by BER.

In the model of OFDM, On the transmitter side, binary information is grouped and mapped according selected modulation scheme. After serial/parallel (S/P) conversion pilots are inserted either to all subcarriers with a specific period or uniformly between the information data. The modulated data is converted into a time domain signal by taking the N point IDFT. After IDFT, guard time is inserted to OFDM signal during cyclic prefix than sent to channel. In block type pilot based channel estimation, OFDM channel estimation symbols are transmitted periodically, where all subcarriers are used as pilots. In comb type pilot based channel estimation, the pilot signals are uniformly inserted into OFDM symbols. Block type pilot channel estimation is more suitable for slow fading channels, and the comb type pilot channel estimation is more suitable for the middle and fast fading channels. The interpolation technique used here is a Low Pass Interpolation Technique. This technique is performed by inserting zeros into the original sequence and then applying a low pass FIR (Finite Impulse Response) filter which allow to pass original data to pass through unchanged and interpolates such that the mean-square error between the interpolated points and their ideal values is minimized. It is again provided with ANFIS *i.e.* Adaptive Network Based Fuzzy Inference Systems. This structure is provided with two inputs and one output. This is a five layered structure with each layer is having individual function. For the function approximation, GRNN i. e.Generalized Regression Neural Networks are used here. It is two layered 'm' input/output network. The interpolation techniques are used here for calculating BER.[3]

4 CONCLUSION:

This paper presents a comprehensive review on MIMO-OFDM based systems by using neural networks. Neural networks with MIMO OFDM are used for channel estimation. Different methods included certain different algorithms and technologies for improving the bit error rate and for the channel estimation. To improve the performance, we could train multiple ANNs for different parameters. Thus the speed of communication can be improved by reducing the bit error rate.

5 FUTURE SCOPE:

The problems which are included in all technique can be improved. The improvement must be done on certain parameters such as the performance rate of the system can be improved by channel estimator. Neural Networks such as radial basis, SOM can be tested. Length of the pilot symbols can be altered. Starting Weights and Biases can be priory calculated. Efficient training of ANN can improve the performance of the MIMO system. The system can be tested for different modulation schemes and code rates.

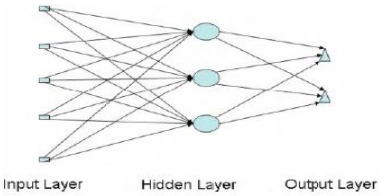

Figure 2- Feed forward Neural Network with one hidden layer.

6 ACKNOLEDGMENT:

The authors are thankful to Principal of PCE for their support and motivation.

7 REFERENCES

[1] John Kassab, Dr. Santosh Nagaraj; "Adaptive Modulation in an OFDM Communications System with Artificial Neural Networks" in Proceedings of International Joint Conference on Neural Networks, Atlanta, Georgia, USA, June 14-19, 2009, pp. 1547-1550

[2] YAvila. JVinoth E, lE. Praveen,K. Thenmozhi, "Performance Augment of Multiband OFDM System with ANN Assisted Concatenated Codes" International Conference on Computing, Electronics and Electrical Technologies [ICCEET], 2012 pp. 676-681

[3] Begüm Korunur Engiz, Çetin Kurnaz, Gökhan Kayhan "Performance Evaluation of ANN Based Channel Interpolation for OFDM System" IEEE, 2012, pp 2831-2843

[4] Jung Nam Bae, Yoon Hyun Kim and Jin Young Kim; : "MIMO OFDM System with AMC and Variable CP Length for Wireless Communications" ; IEEE, ISCIT 2009 pp. 16-20

[5] Bai Mindang "Core Technology and Analysis of 802.11N" 2011 IEEE pp- 978-982

[6] Syed Junaid Nawaz, Dr. Sajjad Mohsin, Dr. Ataul Aziz Ikram "Neural Network based MIMO-OFDM Channel equalizer using Comb-Type pilot arrangement." 2009 IEEE pp- 36-41

[7] Ashraf A. Tahat, "A Matrix Scheme to Extrapolation and Interpolation for a 4G MIMO OFDM System." 2010 IEEE pp – 978-982

[8] Jung Nam Bae, Yoon Hyun Kim, Jin Young Kim, " MIMO OFDM System with AMC and Variable CP Length for Wireless Communication" 2009 IEEE pp-16-20

[9] Md. Masud Rana, "Performance Comparison of LMS and RLS Channel Estimation Algorithms for 40 MIMO OFDM Systems" Proceedings of 14th International Conference on Computer and Information Technology (ICCIT 2011) pp-22-24 December, 2011, Dhaka, Bangladesh