Survey of Indian Power Grid: Overview and Challenges

Gresha S Bhatia
Research Scholar
Thadomal Shahani COE
Bandra, Mumbai, India

J. W. Bakal, Ph.D
(Research Guide)
Principal, Shivajirao S. Jondhale COE
Dombivli (East) , Thane , India

ABSTRACT
Grid management in India is carried out on regional basis of which the southern grid is connected asynchronously while others are synchronously connected. Even though the entire transmission grid works in a specific mode, a number of challenges do exists. In this paper, we present the peculiarities found in the Indian power grids, its mode of working along with the challenges posed during the normal operations of the grid. This is then followed by the available methods for warning systems followed by the need of ICT technologies in handling the power grid failures. This paper further explores the various modules required to help keep the power grid in a good working condition via data mining and ICT technologies.

Keywords
Power Grid, Smart grid, ICT technologies, power failures, identification and prevention.

1. INTRODUCTION
Electrical power grid system comprises of delivering electricity from suppliers to consumers. It can be broadly classified into having three distinct operations namely: Generation, Transmission and Distribution. The Indian power grid is electrically divided into two broad categories namely the Southern grid which is interconnected with the rest of India asynchronously via AC lines where at the endpoints AC has to be converted into DC and the NEW grid (N, E, W, and NE) since both grids operate at different frequencies. However, physically the Indian power grid is demarcated as five regional grids namely Northern (N), Eastern (E), North Eastern (NE), Western (W) and Southern(S) region corridors that carry electricity from power plants to respective states in the country as shown in figure 1. Thus, the quantum and direction of power flow between southern grid and rest of India is controllable because of back to back HDVC (High Voltage Direct Current) [1]. Each of these regions has to cater to different power scenarios controlled by their respective despatch centers [2]. For example: - The Northern region which is snow fed and is the deficit region with highly weather sensitive load. While the North Eastern region has high hydro potential and the Eastern have high coal reserves. Western region has a lot of industrial load to cater to while the Southern region is dependent on the monsoons. Each of these five regions have Regional load Despatch Centre (RLDC) respectively with the National Load Despatch centre (NLDC) at the top of the hierarchy and governed by Power System Operation Limited (POSOCO).These RLDC's further coordinate with State Load Despatch centers (SLDC's) in their respective regions as shown in figure 2. CERC (Central Electricity Regulatory Commission) functions as the regulator at the central level for smooth functioning of the power system while POSOCO functions as the system operator of the country, entrusted with the responsibility of integrated operations , control of the national power grid , energy scheduling, etc and operating via hierarchy of load despatch centre as shown in fig 2. [1][3]

2. EXISTING PROCEDURES:-
A number of mechanisms do exist for handing data and providing secure operations of the grid. However, they are either centralized or local. Automated logic mechanisms have yet to be developed for monitoring purposes in the Indian context [2] [4] as shown in the table 1 below:-

Table 1:- Existing Procedures

Sno	Logic for	Existing Procedures
1	Monitoring of relays	Not available
2	Real time monitoring of loads	Not available
3	Action of disconnection	Preplanned and based on experience
4	Impact assessment	Local

3. PROBLEMS ENCOUNTERED:-
The unbundling process in the power sector, its complexity involved, the rapidly changing demand patterns, dramatic changes in the system parameters, unexpected events in the grids, false triggering of alarms, difficulty in coordinating online and offline operations of different utilities, legacy issues etc makes grid management extremely challenging. Along with these there are a number of other issues namely: -
1) Traditional SCADA / Energy Management Systems (EMS) systems being used in the control centre are working in the centralized manner.
2) SCADA /EMS systems are vendor dependent and work with proprietary software and not fully open communication protocols and is non modular etc.
3) System security issues in the absence of automations.
4) Data management and decision support systems.
5) Power system operation affected by fast acting dynamic phenomenon like power swings, black outs, voltage collapse and instability. All these problems have given rise to a number of challenges /issues that have yet to be solved as explained in the next section.

Source: http://www.mapsofindia.com/maps/india/power-grid
Figure 1:- Power grid regions of India

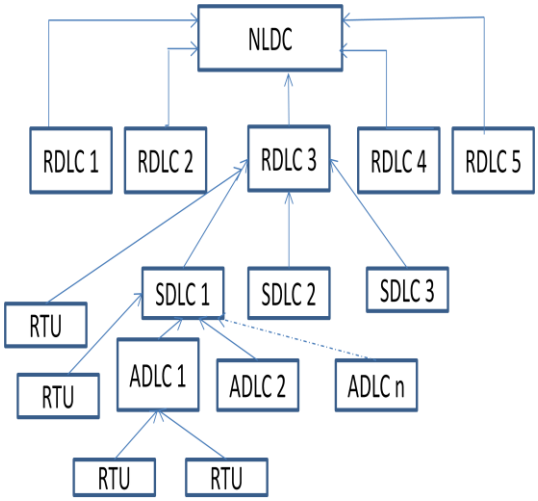

Source: - http://www.desismartgrid.com/2012/08/indian-power-grid-blackout-reasons-and-future-requirements/# **Figure 2:- Indian power grid :- Hierarchy of control centres**

4. CHALLENGES POSED:-

Due to the rigid nature of the existing architectures the control centres are finding it difficult to incorporate: -
1) New services to their existing systems.
2) Creating a common format for various utilities to communicate.
3) Performing data mining and determining the event driven architecture.
4) Scheduling and planning of power based on demand/ supply changes need to be continuously performed. Though this exists, mathematical model is yet in its primitive stage.
5) There is also a need to have close monitoring and control on very minute operations of the power grid via use of advanced technologies i.e. using smart grids.
6) There is also a need for applying ICT technologies to communicate effectively between the control centres and various utilities for smooth operations of the power grids.
7) Understanding cascading failures, evaluating the risk of failure.
8) Developing accurate model and metrics to perform corrective measures is a challenge too. [1][3][5].

5. PROPOSED PROCEDURE: - ICT TECHNOLOGIES VIA SMART GRID:-

Smart grid, also known as intelligent grid, intelligrid, future grid is regarded as a electrical system that uses Information (I), two way communication (C) technologies (T) in an integrated fashion across electricity generation, transmission, distribution and control to achieve a system that is clean, secure, safe, reliable, resilient, efficient and sustainable and uses NIST (National Institute of Standards and Technology) as a reference model. One of the major areas where employment of ICT is required is the smart protection system dealing with failure protection mechanisms and improving system reliability. [1][3][5].

6. FAILURE PROTECTION AND PREVENTION:

Power systems need to be protected against inadvertent compromise of the grid infrastructure due to user errors, equipment failures, natural disasters, deliberate cyber attacks etc. With respect to power grid systems, WAMS (Wide Area Measurement Systems) is the highly desirable system for monitoring, controlling and providing protection functions and performing real time state estimation and contingency analysis in the power systems. All this needs to be done via advanced ICT technologies. Automated defense mechanisms need to be developed to keep the system secure. Since the grids are highly interconnected, due to manual actions, there is high response time. So, there is a need for automated control actions for secure operation of the grid. Various logics need to be developed for controlling automatically - over-drawals, under-drawals, under voltage, Line loading crossing pre – defined thresholds, power exceeding total transfer capacity (TTC) etc. Therefore, in order to protect the power grids the main modules that need to be developed are as described below in the next section.

7. SUGGESTED MODULES:-

In order to provide a secure operation of the power grid, the various processes that need to be catered to are as follows:-

1) Identifying the state of operation: -

This module would comprise of algorithms for identifying normal, alert, emergency, failure states based on various grid parameters.

2) Identifying the type of failure:-

This module will comprise of identifying the type of failure based on the duration, its effect, noise or false alarms, surge voltages etc The modules to be implemented in this case would be feature selection, ranking between the types of failures. For all this, data from different RTU's (Remote Terminal Units), Phasor Measurement Units (PMU's) , recording instruments , meters etc need to be aggregated, brought to a common format using CIM (Common Information Model), or ontology and then its relevant data needs to be cleaned and extracted for mining purpose [6]. For this we need to identify the actual location (localize) where the failure has occurred, the cascaded areas and its impact.

3) Performing data stream mining:-

Since the data is coming from various sources as indicated above, they are continuous, unbounded with huge amount and changing data distribution. This raises new issues that need to be considered for performing mining on stream data [7].

4) Prediction and determining the risk involved: -

Failure prediction and prevention play important role in an attempt to prevent failures from happening. Actions need to be taken such that even if the system does fail, identification, diagnosis and recovery are performed quickly to make the system recover from the failure, and work normally as soon as possible. For these algorithms for performing contingency analysis, alerting the authorities, pre-warning messages, creating dashboards, visualization tools etc. can be developed. [8][9].

5) Evaluation of mining results:

The predictions are being made based on ranking of the parameters. Therefore, new models are continuously generated so the evaluation needs to be done via time series of Area under Curve (AUC) values, Receiver Operator Characteristics (ROC) and accompanying rank statistics [9].

6) Evaluation of reliability improvements of powergrid

There is a need to validate that the recommended actions are in fact leading to the expected power system improvements i.e. longer time between failures, accurate predictions [10][11].

7) Run analytics:-

This module would aid in real time decision making using expert systems and decision support systems.[12]

8. DISTINCTIVE FEATURES:-

Use of ICT enablers in the power grid sector can improve the sustainable monitoring, control capabilities and thereby enhance the power grid management systems. When there ICT technologies are properly deployed and managed, they would significantly improvise the operating efficiency of the existing power grids, their centralized power generation and transmission facilities forming the smart grids. The smart grids in turn by working on the suggested modules would be able to collect, organize and store the energy and provide the same during varied load conditions.

9. CONCLUSION:-

The focus of this paper has been on giving an insight into the power sector in the Indian context. It identifies the need of smart environment for managing the power grid systems. For the same, the entire power grid system of the country, its hierarchy of control centers, the problems encountered followed by the challenges posed have been discussed. The paper further specifies the role of ICT technologies for the transmission sector along with the need for smart failure and protection and prevention systems. This led to proposing a few modules to provide a secure, reliable power transmission by identifying, detecting, predicting failures and performing actions beforehand.

10.ACKNOWLEDGEMENTS:-

The authors acknowledges the encouragement by POSOCO .We thank Mr. Pentayya (General Manager), Western Region Load Despatch Centre, POSOCO, and all his colleagues for helping us get an insight into the working of the transmission grid in the Western region of India.

11. REFERENCES:-

[1] Vivek Pandey , " Electricity Grid management in India – An overview"

[2] Power Grid Corporation of India Ltd , Northern Regional Dispatch Center , presentation , 19th July 2007

[3]http://www.desismartgrid.com/2012/08/indian-power-grid-blackout-reasons-and-future-requirements

[4] Grid Security Expert System, presentation, Power Grid Corporation

[5] White Paper on the Smart Grid Vision for India, March 2010

[6] Terry Saxton, "CIM standards overview and its role in the utility enterprise", Austin, Texas, 15 November 2011

[7] Nan Jiang and Le Grunewald ," Research issues in data stream association rule mining ", SIGMOD Record , Vol 35, No 1, March 2006

[8] Xi Fang, Satyajayant Misra, Guoliang Xue, Dejun Yang," Smart Grid – The New and Improved Power Grid: A Survey", September 30, 2011

[9] Program on Technology Innovation: Application of Data Mining Methodology Vulnerability Assessment, 1015278Final Report, July2007EPRI Project Manager P. Zhang Electric Power Research Institute.

[10] Leon Wu, Gail Kaiser , Cynthia Rudin , Roger Anderson, " Data Quality Assurance And Performance Measurement Of Data Mining For Preventive Maintenance Of Power Grid" , KDD4Service '11, San Diego, California, USA Copyright 2011 ACM 978-1-4503-0842-7

[11] Muthumani N, Dr.Anthony Selvadass Thanamani, "A survey of failure prediction methods ", IJEST, vol. 3 No.2 Feb 2011, ISSN: 0975-5462

[12] Complex systems analysis of series of blackouts: Cascading failure critical points, and self-organization Ian Dobsona, Benjamin A. Carreras,Vickie E. Lynch ,David E. Newman Department of Physics, University of Alaska, Fairbanks, Alaska published online 28 June 2007_© 2007 American Institute of Physics